CONTRACT

State of Vermont
Buildings and General Services
Office of Purchasing & Contracting
10 Baldwin St
Montpelier VT 05633-7501
United States

Contract ID		Page
00000000000000000000029548		1 of 3
Contract Dates		**Origin**
06/30/2015 to 06/30/2017		CPS
Description:		**Contract Maximum**
SNOWPLOW BLADE CUTTING EDGES		$9,999,990.00
Buyer Name	**Buyer Phone**	**Contract Status**
Smith,Steven D	828-4681	Approved

Vendor ID 0000345436
Ironhawk Industrial Distribution LLC
1090 E 222nd Street
Euclid OH 44117
United States

Phone #: (888) 843-8612

Line #	Item ID	Item Desc	UOM	Unit Price	Max Qty	Max Amt
1		SNOWPLOW BLADE CUTTING EDGES	EA	0.01000	0.00	0.00

BLADES AND PRICES PER THE ATTACHED LIST

STANDARD CONTRACT FOR SNOWPLOWBLADE CUTTING EDGES

1. Parties. This is a contract for services between the State of Vermont, Office of Purchasing and Contracting (hereafter called "State"), and Ironhawk Industrial Distribution LLC, with the principal place of business in Euclid, OH 44117, (hereafter called "Contractor"). Contractor's form of business organization is Corporation. It is the contractor's responsibility to contact the Vermont Department of Taxes to determine if, by law, the contractor is required to have a Vermont Department of Taxes Business Account Number.

2. Subject Matter. The subject matter of this contract is services generally on the subject of Snowplow Blade Cutting Edges.

3. Contract Term. The period of contractor's performance shall begin on June 30, 2015 and end on June 30, 2017, with option to renew for five (5) one year periods.

If the state exercises the option, it will provide written notice to contractor prior to the end of the term. If exercised, the provision of the option letter shall become part of and be incorporated into the original master price agreement. The total duration of this master price agreement, including the exercise of any options, shall not exceed five years.

4. Prior Approvals. If approval by the Attorney General's Office or the Secretary of Administration is required, (under current law, bulletins, and interpretations), neither this contract nor any amendment to it is binding until it has been approved by either or both such persons.

- Approval by the Attorney General's Office is required.
- Approval by the Secretary of Administration is required.
- Approval by the CIO/Commissioner DII is not required.

5. Amendment. This agreement represents the entire agreement between the parties; No changes, modifications, or amendments in the terms and conditions of this contract shall be effective unless reduced to writing, numbered and signed by the duly authorized representative of the State and Contractor.

6. Cancellation. This contract may be canceled by either party by giving written notice at least thirty (30) days in advance.

7. Attachments. This contract consists of 136 pages including the following attachments which are incorporated herein:

Attachment A - Master Agreement Terms and Conditions
Attachment B - Payment Provisions
Attachment B1-Price Schedule
Attachment C - "Standard State Provisions for Contracts and Grants" a preprinted form (revision date March 1, 2015).
Attachment D - Snowplow Blade Cutting Edges Detailed Specifications

8. Order of Precedence. Any ambiguity, conflict or inconsistency in the Contract Documents shall be resolved according to the following order of precedence:

(1) Standard Contract
(2) Attachment C (Standard Contract Provisions for Contracts and Grants)
(3) Attachment A
(4) Attachment D
(5) Attachment B
(6) Attachment B1

CONTRACT

State of Vermont
Buildings and General Services
Office of Purchasing & Contracting
10 Baldwin St
Montpelier VT 05633-7501
United States

Contract ID		Page
00000000000000000000029548		2 of 3
Contract Dates		**Origin**
06/30/2015 to 06/30/2017		CPS
Description:		**Contract Maximum**
SNOWPLOW BLADE CUTTING EDGES		$9,999,990.00
Buyer Name	**Buyer Phone**	**Contract Status**
Smith,Steven D	828-4681	Approved

Vendor ID 0000345436
Ironhawk Industrial Distribution LLC
1090 E 222nd Street
Euclid OH 44117
United States

Phone #:(888) 843-8612

Line #	Item ID	Item Desc	UOM	Unit Price	Max Qty	Max Amt

IF YOU HAVE ANY QUESTIONS REGARDING THIS DOCUMENT PLEASE CONTACT:
STEVE SMITH
PURCHASING AGENT
802-828-4681
FAX 802-828-2222
steven.smith@state.vt.us

QUANTITY: THE ANNUAL VALUE AND QUANTITIES ARE ESTIMATED ONLY BASED ON PRIOR USAGE; ACTUAL PURCHASES MAY BE HIGHER OR LOWER DEPENDING ON THE STATE'S NEEDS. THE CONTRACT MAXIMUM IS NOT REFLECTIVE OF ACTUAL USAGE.

DELIVERY: RESPONSIBILITY FOR PRODUCT DELIVERY REMAINS WITH THE CONTRACTOR UNTIL THE PRODUCT IS PROPERLY DELIVERED AND SIGNED FOR IN ACCORDANCE WITH THE OFFICE OF PURCHASING & CONTRACTING TERMS AND CONDITIONS. SHIPMENTS SHALL BE SECURELY AND PROPERLY PACKED, ACCORDING TO ACCEPTED COMMERCIAL PRACTICES, WITHOUT EXTRA CHARGE FOR PACKING CASES OR OTHER CONTAINERS. SUCH CONTAINERS WILL REMAIN THE PROPERTY OF THE STATE UNLESS OTHERWISE STATED. DELIVERED GOODS THAT DO NOT CONFORM TO THE SPECIFICATIONS OR ARE NOT IN GOOD CONDITION UPON RECEIPT SHALL BE REPLACED PROMPTLY BY THE CONTRACTOR.

PRICING: ALL EQUIPMENT PRICING IS TO INCLUDE F.O.B. DELIVERY TO THE ORDERING FACILITY. NO REQUEST FOR EXTRA DELIVERY COST WILL BE HONORED. ALL EQUIPMENT SHALL BE DELIVERED ASSEMBLED, SERVICED, OILED, AND READY FOR IMMEDIATE USE, UNLESS OTHERWISE REQUESTED BY THE PURCHASING AGENCY.

QUALITY: ALL PRODUCTS PROVIDED UNDER THESE AGREEMENTS WILL BE NEW AND UNUSED, UNLESS OTHERWISE STATED. FACTORY SECONDS OR REMANUFACTURED PRODUCTS WILL NOT BE ACCEPTED UNLESS SPECIFICALLY REQUESTED BY THE PURCHASING AGENCY. ALL PRODUCTS PROVIDED BY THE CONTRACTOR MUST MEET ALL FEDERAL, STATE, AND LOCAL STANDARDS FOR QUALITY AND SAFETY REQUIREMENTS. PRODUCTS NOT MEETING THESE STANDARDS WILL BE DEEMED UNACCEPTABLE AND RETURNED TO THE CONTRACTOR FOR CREDIT AT NO CHARGE TO THE STATE.

METHOD OF ORDERING: PURCHASE ORDERS MUST BE USED TO ORDER ITEMS AVAILABLE UNDER THIS CONTRACT. IF VERBAL ORDERS ARE GIVEN A CONFIRMING PURCHASE ORDER MUST BE ISSUED.

INVOICING: ALL INVOICES ARE TO BE RENDERED BY THE CONTRACTOR ON THE VENDOR'S STANDARD BILLHEAD AND FORWARDED DIRECTLY TO THE INSTITUTION OR AGENCY ORDERING MATERIALS OR SERVICES AND SHALL SPECIFY THE ADDRESS TO WHICH PAYMENTS WILL BE SENT.

CANCELLATION: THE STATE SPECIFICALLY RESERVES THE RIGHT TO CANCEL THE CONTRACT, OR ANY PORTION THEREOF, IF, IN THE OPINION OF ITS COMMISSIONER OF BUILDINGS AND GENERAL SERVICES, THE SERVICES OR MATERIALS SUPPLIED BY THE CONTRACTOR ARE NOT SATISFACTORY OR ARE NOT CONSISTENT WITH THE TERMS OF THE CONTRACT

DEFAULT: IN CASE OF DEFAULT OF THE CONTRACTOR, THE STATE MAY PROCURE THE MATERIALS OR SUPPLIES FROM OTHER SOURCES AND HOLD THE CONTRACTOR RESPONSIBLE FOR ANY EXCESS COST OCCASIONED THEREBY, PROVIDED, THAT IF PUBLIC NECESSITY REQUIRES THE USE OF MATERIALS OR SUPPLIES NOT CONFORMING TO THE SPECIFICATIONS THEY MAY BE ACCEPTED AND PAYMENT THEREFORE SHALL BE MADE AT A PROPER REDUCTION IN PRICE.

CONTRACT TERMS: THIS CONTRACT WILL BE SUBJECT TO REVIEW THROUGHOUT ITS TERM. THE STATE WILL CONSIDER CANCELLATION UPON DISCOVERY THAT A VENDOR IS IN VIOLATION OF ANY PORTION OF THE AGREEMENT, INCLUDING AN INABILITY BY THE VENDOR TO PROVIDE THE PRODUCTS, SUPPORT, AND/OR SERVICE OFFERED IN THEIR RESPONSE.

THE VISA PURCHASING CARD MAY BE USED AS A FORM OF PAYMENT UNDER THIS CONTRACT.

VERMONT STATE COLLEGES: THIS CONTRACT IS ALSO AVAILABLE FOR USE BY THE UNIVERSITY OF VERMONT AND THE VERMONT STATE COLLEGES INC., A SEPARATE CORPORATION, HAVING UNDER ITS JURISDICTION CASTLETON STATE COLLEGE, JOHNSON STATE COLLEGE, LYNDON STATE COLLEGE, COMMUNITY COLLEGE OF VERMONT, AND THE VERMONT TECHNICAL COLLEGE.

TOWNS AND SCHOOLS OF THE STATE OF VERMONT: AT THE BIDDER'S ELECTION POLITICAL SUBDIVISIONS AND INDEPENDENT COLLEGES OF THE STATE MAY PARTICIPATE IN STATE CONTRACTS AT THE SAME PRICES, TERMS AND CONDITIONS. ITEMS FURNISHED TO POLITICAL SUBDIVISIONS AND INDEPENDENT COLLEGES WILL BE BILLED DIRECTLY TO AND PAID FOR BY THE POLITICAL SUBDIVISIONS OR INDEPENDENT COLLEGES AND NEITHER THE STATE NOR ITS COMMISSIONER OF BUILDINGS AND GENERAL SERVICES PERSONALLY OR OFFICIALLY ASSUMES ANY RESPONSIBILITY FOR THESE PAYMENTS.
CONTRACT TERMS AND ADDITIONAL INFORMATION

CONTRACT

State of Vermont
Buildings and General Services
Office of Purchasing & Contracting
10 Baldwin St
Montpelier VT 05633-7501
United States

		Page
Contract ID 00000000000000000000029548		3 of 3
Contract Dates 06/30/2015 to 06/30/2017		Origin CPS
Description: SNOWPLOW BLADE CUTTING EDGES		Contract Maximum $9,999,990.00
Buyer Name Smith,Steven D	Buyer Phone 828-4681	Contract Status Approved

Vendor ID 0000345436
Ironhawk Industrial Distribution LLC
1090 E 222nd Street
Euclid OH 44117
United States

Phone #: (888) 843-8612

Line #	Item ID	Item Desc	UOM	Unit Price	Max Qty	Max Amt

AGENCIES & DEPARTMENTS ARE REQUESTED TO ADVISE THE PURCHASING AGENT AT ONCE OF THE FAILURE ON THE PART OF THE CONTRACTOR TO FULFILL ANY OF THE TERMS OR CONDITIONS OF THIS CONTRACT.

PLEASE REFER TO THE ASSIGNED CONTRACT NUMBER/PURCHASE ORDER # ON ALL CORRESPONDENCE, DELIVERY DOCUMENTS AND INVOICES.

WE THE UNDERSIGNED PARTIES AGREE TO BE BOUND BY THIS CONTRACT

By the STATE of VERMONT

Date: E-SIGNED by DEBORAH DAMORE on 2015-07-24 16:14:55 GMT
Signature:
Name: Deborah Damore
Title: Director
Email: Purchasing & Contracting

By the CONTRACTOR

Date: July 15, 2015
Signature:
Name: Patrick Hawkins
Title: President
Email: sales@ironhawkindustrial.com

ATTACHMENT A: MASTER AGREEMENT TERMS AND CONDITIONS

Scope of Work

Contractor to provide various types of snowplow cutting edges, in accordance with the attached detailed specifications, drawings and diagrams and prices lists to various state agencies and political subdivisions within Vermont and any NASPO VALUEPOINT (FORMERLY WSCA-NASPO) participating entity.

There are 12 individual blade category types as referenced in Attachment D

Overview:

The State of Vermont, Office of Purchasing & Contracting, was the lead state in a Request for Proposal on behalf of the State of Vermont and NASPO VALUEPOINT (FORMERLY WSCA-NASPO) Cooperative Procurement Program resulting in a Master Agreement Award. After evaluation by a multi-state sourcing team the solicitation resulted in Master Agreement with qualified manufacturers for various types of snowplow cutting edges.

Master Agreement Order of Precedence

a. For any Order placed under this Master Agreement, any conflict among these documents shall be resolved by giving priority to these documents in the order below:

(1) A Participating Entity's Participating Addendum ("PA");

(2) Except for Orders by the Lead State, this Attachment A;

(3) Section 8, Order of Precedence, of the State of Vermont Contract;

b. These documents shall be read to be consistent and complementary. Any conflict among these documents shall be resolved by giving priority to these documents in the order listed above. Contractor terms and conditions that apply to this Master Agreement are only those that are expressly accepted by the Lead State and must be in writing and attached to this Master Agreement as an Exhibit or Attachment.

Term of the Master Agreement

The initial term of this Master Agreement is for Two years. This Master Agreement may be extended beyond the original contract period for Five additional years at the Lead State's

discretion and by mutual agreement and upon review of requirements of Participating Entities, current market conditions, and Contractor performance.

1. Amendments

The terms of this Master Agreement shall not be waived, altered, modified, supplemented or amended in any manner whatsoever without prior written approval of the Lead State Contract Administrator.

2. Assignment/Subcontracts

a. Contractor shall not assign, sell, transfer, subcontract or sublet rights, or delegate responsibilities under this Master Agreement, in whole or in part, without the prior written approval of the Lead State Contract Administrator.

b. The Lead State Contract Administrator reserves the right to assign any rights or duties, including written assignment of contract administration duties to the NASPO VALUEPOINT organization, FORMERLY WSCA-NASPO (hereafter "NASPO ValuePoint").

3. Cancellation

Unless otherwise stated, this Master Agreement may be canceled by either party upon 60 days written notice prior to the effective date of the cancellation. Further, any Participating State or other Participating Entity may cancel its participation upon 30 days written notice, unless otherwise limited or stated in the Participating Addendum. Cancellation may be in whole or in part. Any cancellation under this provision shall not affect the rights and obligations attending orders outstanding at the time of cancellation, including any right of and Purchasing Entity to indemnification by the Contractor, rights of payment for Products delivered and accepted, and rights attending any warranty or default in performance in association with any Order. Cancellation of the Master Agreement due to Contractor default may be immediate.

4. Confidentiality, Non-Disclosure, and Injunctive Relief

a. Confidentiality. Contractor acknowledges that it and its employees or agents may, in the course of providing a Product under this Master Agreement, be exposed to or acquire information that is confidential to Purchasing Entity's or Purchasing Entity's clients. Any and all information of any form that is marked as confidential or would by its nature be deemed confidential obtained by Contractor or its employees or agents in the performance of this Master Agreement, including, but not necessarily limited to (1) any Purchasing Entity's records, (2) personnel records, and (3) information concerning individuals, is confidential information of

Purchasing Entity ("Confidential Information"). Any reports or other documents or items (including software) that result from the use of the Confidential Information by Contractor shall be treated in the same manner as the Confidential Information. Confidential Information does not include information that (1) is or becomes (other than by disclosure by Contractor) publicly known; (2) is furnished by Purchasing Entity to others without restrictions similar to those imposed by this Master Agreement; (3) is rightfully in Contractor's possession without the obligation of nondisclosure prior to the time of its disclosure under this Master Agreement; (4) is obtained from a source other than Purchasing Entity without the obligation of confidentiality, (5) is disclosed with the written consent of Purchasing Entity or; (6) is independently developed by employees, agents or subcontractors of Contractor who can be shown to have had no access to the Confidential Information.

b. Non-Disclosure. Contractor shall hold Confidential Information in confidence, using at least the industry standard of confidentiality, and shall not copy, reproduce, sell, assign, license, market, transfer or otherwise dispose of, give, or disclose Confidential Information to third parties or use Confidential Information for any purposes whatsoever other than what is necessary to the performance of Orders placed under this Master Agreement. Contractor shall advise each of its employees and agents of their obligations to keep Confidential Information confidential. Contractor shall use commercially reasonable efforts to assist Purchasing Entity in identifying and preventing any unauthorized use or disclosure of any Confidential Information. Without limiting the generality of the foregoing, Contractor shall advise Purchasing Entity, applicable Participating Entity, and the Lead State Contract Administrator immediately if Contractor learns or has reason to believe that any person who has had access to Confidential Information has violated or intends to violate the terms of this Master Agreement, and Contractor shall at its expense cooperate with Purchasing Entity in seeking injunctive or other equitable relief in the name of Purchasing Entity or Contractor against any such person. Except as directed by Purchasing Entity, Contractor will not at any time during or after the term of this Master Agreement disclose, directly or indirectly, any Confidential Information to any person, except in accordance with this Master Agreement, and that upon termination of this Master Agreement or at Purchasing Entity's request, Contractor shall turn over to Purchasing Entity all documents, papers, and other matter in Contractor's possession that embody Confidential Information. Notwithstanding the foregoing, Contractor may keep one copy of such Confidential Information necessary for quality assurance, audits and evidence of the performance of this Master Agreement.

c. Injunctive Relief. Contractor acknowledges that breach of this section, including disclosure of any Confidential Information, will cause irreparable injury to Purchasing Entity that is inadequately compensable in damages. Accordingly, Purchasing Entity may seek and obtain

injunctive relief against the breach or threatened breach of the foregoing undertakings, in addition to any other legal remedies that may be available. Contractor acknowledges and agrees that the covenants contained herein are necessary for the protection of the legitimate business interests of Purchasing Entity and are reasonable in scope and content.

d. Purchasing Entity Law. These provisions shall be applicable only to extent they are not in conflict with the applicable public disclosure laws of any Purchasing Entity.

5. Right to Publish

Throughout the duration of this Master Agreement, Contractor must secure from the Lead State Contract Administrator prior approval for the release of any information that pertains to the potential work or activities covered by the Master Agreement. The Contractor shall not make any representations of NASPO ValuePoint's opinion or position as to the quality or effectiveness of the services that are the subject of this Master Agreement without prior written consent. Failure to adhere to this requirement may result in termination of the Master Agreement for cause.

6. Defaults and Remedies

a. The occurrence of any of the following events shall be an event of default under this Master Agreement:

(1) Nonperformance of contractual requirements; or

(2) A material breach of any term or condition of this Master Agreement; or

(3) Any certification, representation or warranty by Contractor in response to the solicitation or in this Master Agreement that proves to be untrue or materially misleading; or

(4) Institution of proceedings under any bankruptcy, insolvency, reorganization or similar law, by or against Contractor, or the appointment of a receiver or similar officer for Contractor or any of its property, which is not vacated or fully stayed within thirty (30) calendar days after the institution or occurrence thereof; or .

(5) Any default specified in another section of this Master Agreement.

b. Upon the occurrence of an event of default, Lead State Contract Administrator shall issue a written notice of default, identifying the nature of the default, and providing a period of 15 calendar days in which Contractor shall have an opportunity to cure the default. The Lead State Contract Administrator shall not be required to provide advance written notice or a cure period and may immediately terminate this Master Agreement in whole or in part if the Lead State Contract Administrator, in its sole discretion, determines that it is reasonably necessary to preserve public safety or prevent immediate public crisis. Time allowed for cure shall not

diminish or eliminate Contractor's liability for damages, including liquidated damages to the extent provided for under this Master Agreement.

c. If Contractor is afforded an opportunity to cure and fails to cure the default within the period specified in the written notice of default, Contractor shall be in breach of its obligations under this Master Agreement and Lead State Contract Administrator shall have the right to exercise any or all of the following remedies:

(1) Exercise any remedy provided by law; and

(2) Terminate this Master Agreement and any related Contracts or portions thereof; and

(3) Impose liquidated damages as provided in this Master Agreement; and

(4) Suspend Contractor from being able to respond to future bid solicitations; and

(5) Suspend Contractor's performance; and

(6) Withhold payment until the default is remedied.

d. Unless other specified in the Participating Addendum, in the event of a default under a Participating Addendum, a Participating Entity shall provide a written notice of default as described in this section and have all of the rights and remedies under this paragraph regarding its participation in the Master Agreement, in addition to those set forth in its Participating Addendum. Unless otherwise specified in a Purchase Order, a Purchasing Entity shall provide written notice of default as described in this section and have all of the rights and remedies under this paragraph and any applicable Participating Addendum with respect to an Order placed by the Purchasing Entity. Nothing in these Master Agreement Terms and Conditions shall be construed to limit the rights and remedies available to a Purchasing Entity under the applicable commercial code.

7. Shipping and Delivery.

a. **DELIVERY:** Responsibility for product delivery remains with the contractor until the product is properly delivered and signed for in accordance with the Purchasing Entity terms and conditions. Shipments shall be securely and properly packed, according to accepted commercial practices, without extra charge for packing cases or other containers. Such containers will remain the property of the State unless otherwise stated. Delivered goods that do not conform to the specifications or are not in good condition upon receipt shall be replaced promptly by the contractor.

b. Cases shall be of durable construction, good condition, properly labeled and suitable in every respect for storage and handling of contents. Each shipping carton shall be marked with the commodity, brand, quantity, item code number and the Purchasing Entity's Purchase Order number.

8. Changes in Contractor Representation

The Contractor must notify the Lead State Contract Administrator of changes in the Contractor's key administrative personnel working on this Contract, in writing within 10 calendar days of the change. The Lead State Contract Administrator reserves the right to approve changes in key personnel working on this Contract. The Contractor agrees to propose replacement key personnel having substantially equal or better education, training, and experience as was possessed by the key person proposed by the Contractor in its bid and approved by the Lead State upon contract execution.

9. Force Majeure

Neither party to this Master Agreement shall be held responsible for delay or default caused by fire, riot, acts of God and/or war which is beyond that party's reasonable control. The Lead State Contract Administrator may terminate this Master Agreement after determining such delay or default will reasonably prevent successful performance of the Master Agreement.

10. Indemnification

a. The Contractor shall defend, indemnify and hold harmless NASPO ValuePoint, the Lead State Contract Administrator, Participating Entities, and Purchasing Entities, along with their officers, agents, and employees as well as any person or entity for which they may be liable, from and against claims, damages or causes of action including reasonable attorneys' fees and related costs for any death, injury, or damage to property arising from act(s), error(s), or omission(s) of the Contractor, its employees or subcontractors or volunteers, at any tier, relating to the performance under the Master Agreement.

b. Indemnification – Intellectual Property. The Contractor shall defend, indemnify and hold harmless NASPO ValuePoint,the Lead State Contract Administrator, Participating Entities, Purchasing Entities, along with their officers, agents, and employees as well as any person or entity for which they may be liable ("Indemnified Party"), from and against claims, damages or causes of action including reasonable attorneys' fees and related costs arising out of the claim that the Product or its use, infringes Intellectual Property rights ("Intellectual Property Claim").

(1) The Contractor's obligations under this section shall not extend to any combination of the Product with any other product, system or method, unless the Product, system or method is:

(a) provided by the Contractor or the Contractor's subsidiaries or affiliates;

(b) specified by the Contractor to work with the Product; or

(c) reasonably required, in order to use the Product in its intended manner, and the infringement could not have been avoided by substituting another reasonably available product, system or method capable of performing the same function; or

(d) It would be reasonably expected to use the Product in combination with such product, system or method.

(2) The Indemnified Party shall notify the Contractor within a reasonable time after receiving notice of an Intellectual Property Claim. Even if the Indemnified Party fails to provide reasonable notice, the Contractor shall not be relieved from its obligations unless the Contractor can demonstrate that it was prejudiced in defending the Intellectual Property Claim resulting in increased expenses or loss to the Contractor. If the Contractor promptly and reasonably investigates and defends any Intellectual Property Claim, it shall have control over the defense and settlement of it. However, the Indemnified Party must consent in writing for any money damages or obligations for which it may be responsible. The Indemnified Party shall furnish, at the Contractor's reasonable request and expense, information and assistance necessary for such defense. If the Contractor fails to vigorously pursue the defense or settlement of the Intellectual Property Claim, the Indemnified Party may assume the defense or settlement of it and the Contractor shall be liable for all costs and expenses, including reasonable attorneys' fees and related costs, incurred by the Indemnified Party in the pursuit of the Intellectual Property Claim. Unless otherwise agreed in writing, this section is not subject to any limitations of liability in this Master Agreement or in any other document executed in conjunction with this Master Agreement.

11. Independent Contractor

The Contractor shall be an independent contractor. Contractor shall have no authorization, express or implied, to bind the Lead State Contract Administrator, Participating States, other Participating Entities, or Purchasing Entities to any agreements, settlements, liability or understanding whatsoever, and agrees not to hold itself out as agent except as expressly set forth herein or as expressly agreed in any Participating Addendum.

12. Individual Customers

Except to the extent modified by a Participating Addendum, each Purchasing Entity shall follow the terms and conditions of the Master Agreement and applicable Participating Addendum and

will have the same rights and responsibilities for their purchases as the Lead State Contract Administrator has in the Master Agreement, including but not limited to, any indemnity or right to recover any costs as such right is defined in the Master Agreement and applicable Participating Addendum for their purchases. Each Purchasing Entity will be responsible for its own charges, fees, and liabilities. The Contractor will apply the charges and invoice each Purchasing Entity individually.

13. Insurance

a. The insurance requirements for the State of Vermont are specified in section 7 of Attachment C. Unless otherwise agreed in a Participating Addendum, Contractor shall, during the term of this Master Agreement, maintain in full force and effect, the insurance described in this section for other Participating Entities. Contractor shall acquire such insurance from an insurance carrier or carriers licensed to conduct business in each Participating Entity's state and having a rating of A-, Class VII or better, in the most recently published edition of Best's Reports. Failure to buy and maintain the required insurance may result in this Master Agreement's termination or, at a Participating Entity's option; result in termination of its Participating Addendum.

b. Coverage shall be written on an occurrence basis. The minimum acceptable limits shall be as indicated below, with no deductible for each of the following categories:

(1) Commercial General Liability covering premises operations, independent contractors, products and completed operations, blanket contractual liability, personal injury (including death), advertising liability, and property damage, with a limit of not less than $1 million per occurrence/$1 million general aggregate;

(2) Contractor must comply with any applicable State Workers Compensation or Employers Liability Insurance requirements.

c. Contractor shall pay premiums on all insurance policies. Such policies shall also reference this Master Agreement and shall have a condition that they not be revoked by the insurer until thirty (30) calendar days after notice of intended revocation thereof shall have been given to Purchasing Entity and Participating Entity by the Contractor.

d. Prior to commencement of performance, Contractor shall provide to the Lead State Contract Administrator a written endorsement to the Contractor's general liability insurance policy or

other documentary evidence acceptable to the Lead State Contract Administrator that (1) names the Participating States identified in the Request for Proposal as additional insureds, (2) provides that no material alteration, cancellation, non-renewal, or expiration of the coverage contained in such policy shall have effect unless the named Participating State has been given at least thirty (30) days prior written notice, and (3) provides that the Contractor's liability insurance policy shall be primary, with any liability insurance of any Participating State as secondary and noncontributory. Unless otherwise agreed in any Participating Addendum, the Participating Entity's rights and Contractor's obligations are the same as those specified in the first sentence of this subsection. Before performance of any Purchase Order issued after execution of a Participating Addendum authorizing it, the Contractor shall provide to a Purchasing Entity or Participating Entity who requests it the same information described in this subsection.

e. Contractor shall furnish to the Lead State Contract Administrator, Participating Entity, and, on request, the Purchasing Entity copies of certificates of all required insurance within thirty (30) calendar days of the execution of this Master Agreement, the execution of a Participating Addendum, or the Purchase Order's effective date and prior to performing any work. The insurance certificate shall provide the following information: the name and address of the insured; name, address, telephone number and signature of the authorized agent; name of the insurance company (authorized to operate in all states); a description of coverage in detailed standard terminology (including policy period, policy number, limits of liability, exclusions and endorsements); and an acknowledgment of the requirement for notice of cancellation. Copies of renewal certificates of all required insurance shall be furnished within thirty (30) days after any renewal date. These certificates of insurance must expressly indicate compliance with each and every insurance requirement specified in this section. Failure to provide evidence of coverage may, at sole option of the Lead State Contract Administrator, or any Participating Entity, result in this Master Agreement's termination or the termination of any Participating Addendum.

f. Coverage and limits shall not limit Contractor's liability and obligations under this Master Agreement, any Participating Addendum, or any Purchase Order.

14. Laws and Regulations

Any and all Products offered and furnished shall comply fully with all applicable Federal and State laws and regulations.

15. License of Pre-Existing Intellectual Property

Contractor grants to the Purchasing Entity a nonexclusive, perpetual, royalty-free, irrevocable, unlimited license to publish, translate, reproduce, modify, deliver, perform, display, and dispose of the Intellectual Property, and its derivatives, used or delivered under this Master Agreement,

but not created under it ("Pre-existing Intellectual Property"). The license shall be subject to any third party rights in the Pre-existing Intellectual Property. Contractor shall obtain, at its own expense, on behalf of the Purchasing Entity, written consent of the owner for the licensed Pre-existing Intellectual Property.

16. No Waiver of Sovereign Immunity

In no event shall this Master Agreement, any Participating Addendum or any contract or any Purchase Order issued thereunder, or any act of a Lead State, a Participating Entity, or a Purchasing Entity be a waiver of any form of defense or immunity, whether sovereign immunity, governmental immunity, immunity based on the Eleventh Amendment to the Constitution of the United States or otherwise, from any claim or from the jurisdiction of any court.

This section applies to a claim brought against the Participating State only to the extent Congress has appropriately abrogated the Participating State's sovereign immunity and is not consent by the Participating State to be sued in federal court. This section is also not a waiver by the Participating State of any form of immunity, including but not limited to sovereign immunity and immunity based on the Eleventh Amendment to the Constitution of the United States.

17. Ordering

a. Master Agreement order and purchase order numbers shall be clearly shown on all acknowledgments, shipping labels, packing slips, invoices, and on all correspondence.

b. The resulting Master Agreements permit Purchasing Entities to define project-specific requirements and informally complete the requirement among companies having a Master Agreement on an "as needed" basis. This procedure may also be used when requirements are aggregated or other firm commitments may be made to achieve reductions in pricing. This procedure may be modified in Participating Addenda and adapted to Purchasing Entity rules and policies. The Purchasing Entity may in its sole discretion determine which Master Agreement Contractors should be solicited for a quote. The Purchasing Agency may select the quote that it considers most advantageous, cost and other factors considered.

c. Each Purchasing Entity will identify and utilize its own appropriate purchasing procedure and documentation. Contractor is expected to become familiar with the Purchasing Entities' rules, policies, and procedures regarding the ordering of supplies and/or services contemplated by this Master Agreement.

d. Contractor shall not begin work without a valid Purchase Order or other appropriate commitment document compliance with the law of the Purchasing Entity.

e. Orders may be placed consistent with the terms of this Master Agreement during the term of the Master Agreement.

f. All Orders pursuant to this Master Agreement, at a minimum, shall include:

(1) The services or supplies being delivered;

(2) The place and requested time of delivery;

(3) A billing address;

(4) The name, phone number, and address of the Purchasing Entity representative;

(5) The price per hour or other pricing elements consistent with this Master Agreement and the contractor's proposal;

(6) A ceiling amount of the order for services being ordered; and

(7) The Master Agreement identifier.

g. All communications concerning administration of Orders placed shall be furnished solely to the authorized purchasing agent within the Purchasing Entity's purchasing office, or to such other individual identified in writing in the Order.

h. Orders must be placed pursuant to this Master Agreement prior to the termination date thereof, but may have a delivery date or performance period up to 120 days past the then-current termination date of this Master Agreement. Contractor is reminded that financial obligations of Purchasing Entities payable after the current applicable fiscal year are contingent upon agency funds for that purpose being appropriated, budgeted, and otherwise made available.

i. Notwithstanding the expiration or termination of this Master Agreement, Contractor agrees to perform in accordance with the terms of any Orders then outstanding at the time of such

expiration or termination. Contractor shall not honor any Orders placed after the expiration or termination of this Master Agreement, or otherwise inconsistent with its terms. Orders from any separate indefinite quantity, task orders, or other form of indefinite delivery order arrangement priced against this Master Agreement may not be placed after the expiration or termination of this Master Agreement, notwithstanding the term of any such indefinite delivery order agreement.

18. Participants

a. Contractor may not deliver Products under this Master Agreement until a Participating Addendum acceptable to the Participating Entity and Contractor is executed. The NASPO ValuePoint Master Agreement Terms and Conditions are applicable to any Order by a Participating Entity (and other Purchasing Entities covered by their Participating Addendum), except to the extent altered, modified, supplemented or amended by a Participating Addendum. By way of illustration and not limitation, this authority may apply to unique delivery and invoicing requirements, confidentiality requirements, defaults on Orders, governing law and venue relating to Orders by a Participating Entity, indemnification, and insurance requirements. Statutory or constitutional requirements relating to availability of funds may require specific language in some Participating Addenda in order to comply with applicable law. The expectation is that these alterations, modifications, supplements, or amendments will be addressed in the Participating Addendum or, with the consent of the Purchasing Entity and Contractor, may be included in the ordering document (e.g. purchase order or contract) used by the Purchasing Entity to place the Order.

b. Use of specific NASPO ValuePoint cooperative Master Agreements by state agencies, political subdivisions and other Participating Entities (including cooperatives) authorized by individual state's statutes to use state contracts are subject to the approval of the respective State Chief Procurement Official. Issues of interpretation and eligibility for participation are solely within the authority of the respective State Chief Procurement Official.

c. Obligations under this Master Agreement are limited to those Participating Entities who have signed a Participating Addendum and Purchasing Entities within the scope of those Participating Addenda. Financial obligations of Participating States are limited to the orders placed by the departments or other state agencies and institutions having available funds. Participating States incur no financial obligations on behalf of political subdivisions.

d. NASPO ValuePoint is not a party to the Master Agreement. It is a nonprofit cooperative purchasing organization assisting states in administering the NASPO cooperative purchasing program for state government departments, institutions, agencies and political subdivisions (e.g.,

colleges, school districts, counties, cities, etc.) for all 50 states, the District of Columbia and the territories of the United States.

e. State Participating Addenda or other Participating Addenda shall not be construed to amend the terms of this Master Agreement between the Lead State Contract Administrator and Contractor. Participating Entities who execute a Participating Addendum may alter, modified, supplement or amend these NASPO ValuePoint Master Agreement Terms and Conditions as necessary to comply with Participating Entity law or policy with respect to their Orders (or Orders of Purchasing Entities encompassed by their Participating Addendum) under the Master Agreement.

f. Participating Entities who are not states may under some circumstances sign their own Participating Addendum, subject to the approval of the Chief Procurement Official of the state where the Participating Entity is located. Contractors may upon request obtain a copy of the written authorization from the Lead State Contract Administrator.

19. Payment

Payment for completion of a contract order will normally be made within 30 days following the date the entire order is delivered or the date a correct invoice is received, whichever is later. Payments will be remitted by mail. Payments may be made via a State or political subdivision."Purchasing Card" with no additional charge.

20. Public Information

This Master Agreement and all related documents are subject to disclosure pursuant to the State of Vermont's public information laws, and with respect to Participating Addenda and Orders, the Participating Entity's and Purchasing Entity's public information laws.

21. Records available for Audit

a. The Contractor shall maintain books, records, documents, and other evidence pertaining to this Master Agreement and orders placed by Purchasing Entities under it to the extent and in such detail as shall adequately reflect performance and administration of payments and fees. "Records" means any written or recorded information, regardless of physical form or characteristics, which is produced or acquired by the Contractor in the performance of this agreement. Records produced or acquired in a machine readable electronic format shall be maintained in that format. Contractor shall permit the Lead State Contract Administrator, a Participating Entity, a Purchasing Entity, the federal government (including its grant awarding entities and the U.S. Comptroller General), and any other duly authorized agent of a governmental agency, to audit, inspect, examine, copy and/or transcribe Contractor's books, documents, papers and records directly

pertinent to this Master Agreement or orders placed by a Purchasing Entity under it for the purpose of making audits, examinations, excerpts, and transcriptions. This right shall survive for a period of five (5) years following termination of this Agreement or final payment for any order placed by a Purchasing Entity against this Agreement, whichever is later, to assure compliance with the terms hereof or to evaluate performance hereunder.

b. Without limiting any other remedy available to any governmental entity, the Contractor shall reimburse the applicable Lead State, Participating Entity, or Purchasing Entity for any overpayments inconsistent with the terms of the Master Agreement or orders or underpayment of fees found as a result of the examination of the Contractor's records.

c. The rights and obligations herein right exist in addition to any quality assurance obligation in the Master Agreement requiring the Contractor to self-audit contract obligations and that permits the Lead State Contract Administrator to review compliance with those obligations.

22. Administrative Fees

a. The Contractor shall pay to NASPO ValuePoint, or its assignee, a NASPO ValuePoint Administrative Fee of one-quarter of one percent (0.25% or 0.0025) no later than 60 days following the end of each calendar quarter. The NASPO ValuePoint Administrative Fee shall be submitted quarterly and is based on sales of products and services (less any charges for taxes or shipping). The NASPO ValuePoint Administrative Fee is not negotiable. This fee is to be included as part of the pricing submitted with proposal.

b. Additionally, some states may require an additional fee be paid directly to the state on purchases made by Purchasing Entities within that state. For all such requests, the fee level, payment method and schedule for such reports and payments will be incorporated into the Participating Addendum that is made a part of the Master Agreement. The Contractor may adjust the Master Agreement pricing accordingly for purchases made by Purchasing Entities within the jurisdiction of the state. All such agreements shall not affect the NASPO ValuePoint Administrative Fee or the prices paid by the Purchasing Entities outside the jurisdiction of the state requesting the additional fee. The NASPO ValuePoint Administrative Fee in subsection 22a shall be based on the gross amount of all sales (less any charges for taxes or shipping) at the adjusted prices (if any) in Participating Addenda.

23. NASPO ValuePoint Summary and Detailed Usage Reports

In addition to other reports that may be required by this solicitation, the Contractor shall provide the following NASPO ValuePoint reports.

a. Summary Sales Data. The Contractor shall submit quarterly sales reports directly to NASPO ValuePoint using the NASPO ValuePoint Quarterly Sales/Administrative Fee Reporting Tool found at http://www.naspo.org/WNCPO/Calculator.aspx. Any/all sales made under the contract shall be reported as cumulative totals by state. Even if Contractor experiences zero sales during a calendar quarter, a report is still required. Reports shall be due no later than 30 day following the end of the calendar quarter (as specified in the reporting tool).

b. Detailed Sales Data. Contract Vendor shall also report detailed sales data by: (1) state; (2) entity/customer type, e.g. local government, higher education, K12, non-profit; (3) Purchasing Entity name; (4) Purchasing Entity bill-to and ship-to locations; (4) Purchasing Entity and Contract Vendor Purchase Order identifier/number(s); (5) Purchase Order Type (e.g. sales order, credit, return, upgrade, determined by industry practices); (6) Purchase Order date; (7) Ship Date; (8) and line item description, including product number if used. The report shall be submitted in any form required by the solicitation. Reports are due on a quarterly basis and must be received by the Lead State and NASPO ValuePoint Cooperative Development Team no later than thirty (30) days after the end of the reporting period. Reports shall be delivered to the Lead State and to the NASPO ValuePoint Cooperative Development Team electronically through a designated portal, email, CD-ROM, flash drive or other method as determined by the Lead State. Detailed sales data reports shall include sales information for all sales under Participating Addenda executed under this Master Agreement.

c. Reportable sales for the summary sales data report and detailed sales data report includes sales to employees for personal use where authorized by the solicitation.

d. Timely submission of these reports is a material requirement of the Master Agreement. The recipient of the reports shall have exclusive ownership of the media containing the reports. The Lead State and NASPO ValuePoint shall have a perpetual, irrevocable, non-exclusive, royalty free, transferable right to display, modify, copy, and otherwise use reports, data and information provided under this section.

24. Standard of Performance and Acceptance.

Any standard of performance under this Master Agreement applies to all Products purchased under this Master Agreement, including any additional, replacement, or substitute Product(s) and any Product(s) which are modified by or with the written approval of Contractor after Acceptance by the Purchasing Entity. The Acceptance Testing period shall be thirty (30)

calendar days or other time period identified in the solicitation or the Participating Addendum, starting from the day after the Product is delivered or, if installed, the day after the Product is installed and Contractor certifies that the Product is ready for Acceptance Testing. If the Product does not meet the standard of performance during the initial period of Acceptance Testing, Purchasing Entity may, at its discretion, continue Acceptance Testing on a day-to-day basis until the standard of performance is met. Upon rejection, the Contractor will have fifteen (15) calendar days to cure the standard of performance issue(s). If after the cure period, the Product still has not met the standard of performance, the Purchasing Entity may, at its option: (a) declare Contractor to be in breach and terminate the Order; (b) demand replacement Product from Contractor at no additional cost to Purchasing Entity; or, (c) continue the cure period for an additional time period agreed upon by the Purchasing Entity and the Contractor. Contractor shall pay all costs related to the preparation and shipping of Product returned pursuant to the section. No Product shall be accepted and no charges shall be paid until the standard of performance is met. The warranty period will begin upon Acceptance.

25. Warranty

The Contractor warrants for a period of one year from the date of Acceptance that: (a) the Product performs according to all specific claims that the Contractor made in its response to the solicitation, (b) the Product is suitable for the ordinary purposes for which such Product is used, (c) the Product is suitable for any special purposes identified in the solicitation or for which the Purchasing Entity has relied on the Contractor's skill or judgment, (d) the Product is designed and manufactured in a commercially reasonable manner, and (e) the Product is free of defects. Upon breach of the warranty, the Contractor will repair or replace (at no charge to the Purchasing Entity) the Product whose nonconformance is discovered and made known to the Contractor. If the repaired and/or replaced Product proves to be inadequate, or fails of its essential purpose, the Contractor will refund the full amount of any payments that have been made. The rights and remedies of the parties under this warranty are in addition to any other rights and remedies of the parties provided by law or equity, including, without limitation, actual damages, and, as applicable and awarded under the law, to a prevailing party, reasonable attorneys' fees and costs.

26. System Failure or Damage

In the event of system failure or damage caused by the Contractor or its Product, the Contractor agrees to use its best efforts to restore or assist in restoring the system to operational capacity.

27. Title of Product

Upon Acceptance by the Purchasing Entity, Contractor shall convey to Purchasing Entity title to the Product free and clear of all liens, encumbrances, or other security interests. Transfer of title to the Product shall include an irrevocable and perpetual license to use any Embedded Software in the Product. If Purchasing Entity subsequently transfers title of the Product to another entity,

Purchasing Entity shall have the right to transfer the license to use the Embedded Software with the transfer of Product title. A subsequent transfer of this software license shall be at no additional cost or charge to either Purchasing Entity or Purchasing Entity's transferee.

28. Waiver of Breach

Failure of the Lead State Contract Administrator, Participating Entity, or Purchasing Entity to declare a default or enforce any rights and remedies shall not operate as a waiver under this Master Agreement or Participating Addendum. Any waiver by the Lead State Contract Administrator, Participating Entity, or Purchasing Entity must be in writing. Waiver by the Lead State Contract Administrator or Participating Entity of any default, right or remedy under this Master Agreement or Participating Addendum, or by Purchasing Entity with respect to any Purchase Order, or breach of any terms or requirements of this Master Agreement, a Participating Addendum, or Purchase Order shall not be construed or operate as a waiver of any subsequent default or breach of such term or requirement, or of any other term or requirement under this Master Agreement, Participating Addendum, or Purchase Order.

29. Assignment of Antitrust Rights

Contractor irrevocably assigns to a Participating Entity any claim for relief or cause of action which the Contractor now has or which may accrue to the Contractor in the future by reason of any violation of state or federal antitrust laws (15 U.S.C. § 1-15 or a Participating Entity's state antitrust provisions), as now in effect and as may be amended from time to time, in connection with any goods or services provided to the Contractor for the purpose of carrying out the Contractor's obligations under this Master Agreement or Participating Addendum, including, at a Participating Entity's option, the right to control any such litigation on such claim for relief or cause of action.

30. Debarment

The Contractor certifies that neither it nor its principals are presently debarred, suspended, proposed for debarment, declared ineligible, or voluntarily excluded from participation in this transaction (contract) by any governmental department or agency. This certification represents a recurring certification made at the time any Order is placed under this Master Agreement. If the Contractor cannot certify this statement, attach a written explanation for review by the Lead State Contract Administrator.

31. Governing Law and Venue

a. The procurement, evaluation, and award of the Master Agreement shall be governed by and construed in accordance with the laws of the Lead State sponsoring and administering the procurement. The construction and effect of the Master Agreement after award shall be

governed by the law of the state serving as Lead State Contract Administrator (in most cases also the Lead State). The construction and effect of any Participating Addendum or Order against the Master Agreement shall be governed by and construed in accordance with the laws of the Participating Entity's or Purchasing Entity's State.

b. Unless otherwise specified, the venue for any protest, claim, dispute or action relating to the procurement, evaluation, and award is in the Lead State. Venue for any claim, dispute or action concerning the terms of the Master Agreement shall be in the state serving as Lead State Contract Administrator. Venue for any claim, dispute, or action concerning any Order placed against the Master Agreement or the effect of a Participating Addendum shall be in the Purchasing Entity's State.

c. Subject to all immunities, defenses, rights or actions arising out of the Lead State's, or any Participation Entity's or Purchasing Entity's, sovereign status or under the Eleventh Amendment to the United States Constitution, if a claim is brought in a federal forum with jurisdiction, then it must be brought and adjudicated solely and exclusively within the United States District Court for (in decreasing order of priority): the Lead State for claims relating to the procurement, evaluation, award, or contract performance or administration if the Lead State is a party; the Participating Entity if a named party; or the Purchasing Entity if a named party. No waiver of any of the aforementioned immunities, defenses, rights or actions shall be implied or otherwise deemed to exist by reason of the Lead State's, or any Participation Entity's or Purchasing Entity's, entry into this Contract.

32. DEFINITIONS

The following definitions apply to this solicitation contract.

Acceptance means a written notice from a Purchasing Entity to Contractor advising Contractor that the Product has passed its Acceptance Testing. Acceptance of a Product for which acceptance testing is not required shall occur following the completion of delivery, installation, if required, and a reasonable time for inspection of the Product, unless the Purchasing Entity provides a written notice of rejection to Contractor.

Acceptance Testing means the process for ascertaining that the Product meets the standards set forth in the section titled Standard of Performance and Acceptance, prior to Acceptance by the Purchasing Entity.

Contractor means the person or entity delivering Products or performing services under the terms and conditions set forth in this Master Agreement.

Embedded Software means one or more software applications which permanently reside on a computing device.

Intellectual Property means any and all patents, copyrights, service marks, trademarks, trade secrets, trade names, patentable inventions, or other similar proprietary rights, in tangible or intangible form, and all rights, title, and interest therein.

Lead State Contract Administrator means the State centrally administering the Master Agreement after execution with the permission of the NASPO ValuePoint States. The Lead State Administrator normally is the same as the Lead State conducting the cooperative procurement, evaluation, and award.

Master Agreement means the underlying agreement executed by and between the NASPO ValuePoint contract administrator, normally the Lead State, acting on behalf of NASPO ValuePoint, and the Contractor, as now or hereafter amended.

Order or **Purchase Order** means any purchase order, sales order, contract or other document used by a Purchasing Entity to order the Products.

Participating Addendum means a bilateral agreement executed by a Contractor and a Participating Entity incorporating this Master Agreement and any other additional Participating Entity specific language or other requirements, e.g. ordering procedures specific to the Participating Entity, other terms and conditions.

Participating Entity means a state, or other legal entity, properly authorized to enter into a Participating Addendum.

Participating State means a state, the District of Columbia, or one of the territories of the United States that is listed in this Request for Proposal as intending to participate. A Participating State is required to participate through execution of a Participating Addendum. Upon execution of the Participating Addendum, a Participating State becomes a Participating Entity.

Product means any equipment, software (including embedded software), documentation, service or other deliverable supplied or created by the Contractor pursuant to this Master Agreement. The term Products, supplies and services, and products and services are used interchangeably in these terms and conditions.

Purchasing Entity means a state, city, county, district, other political subdivision of a State, and a nonprofit organization under the laws of some states if authorized by a Participating Addendum, who issues a Purchase Order against the Master Agreement and becomes financially committed to the purchase.

NASPO ValuePoint is the NASPO Cooperative Purchasing Program, LLC, doing business as NASPO ValuePoint, , a 501(c)(3) limited liability company that is a subsidiary organization the National Association of State Procurement Officials (NASPO), the sole member of NASPO ValuePoint. NASPO ValuePoint facilitates administration of the cooperative group contracting consortium of state chief procurement officials for the benefit of state departments, institutions, agencies, and political subdivisions and other eligible entities (i.e., colleges, school districts, counties, cities, some nonprofit organizations, etc.) for all states and the District of Columbia. The NASPO ValuePoint Cooperative Development Team is identified in the Master Agreement as the recipient of reports and may be performing contract administration functions relating to collecting and receiving reports as well as other contract administration functions as assigned by the Lead State Contract Administrator.

33. NASPO ValuePoint eMarket Center

a. In July 2011, NASPO ValuePoint entered into a multi-year agreement with SciQuest, Inc. whereby SciQuest will provide certain electronic catalog hosting and management services to enable eligible NASPO ValuePoint entity's customers to access a central online website to view and/or shop the goods and services available from existing NASPO ValuePoint Cooperative Contracts. The central online website is referred to as the NASPO ValuePoint eMarket Center Contractor shall either upload a hosted catalog into the eMarket Center or integrate a punchout site with the eMarket Center.

b. Supplier's Interface with the eMarket Center. There is no cost charged by SciQuest to the Contractor for loading a hosted catalog or integrating a punchout site.

c. At a minimum, the Contractor agrees to the following:

(1) Implementation Timeline: NASPO ValuePoint eMarket Center Site Admin shall provide a written request to the Contractor to begin enablement process. The Contractor shall have fifteen (15) days from receipt of written request to work with NASPO ValuePoint and SciQuest to set up an enablement schedule, at which time SciQuest's technical documentation shall be provided to the Contractor. The schedule will include future calls and milestone dates related to test and go live dates. The contractor shall have a total of Ninety (90) days to deliver either a (1) hosted catalog or (2) punch-out catalog, from date of receipt of written request.

(2) NASPO ValuePoint and SciQuest will work with the Contractor, to decide which of the catalog structures (either hosted or punch-out as further described below) shall be provided by the Contractor. **Whether hosted or punch-out, the catalog must be strictly limited to the Contractor's awarded contract offering (e.g. products and/or services not authorized through the resulting cooperative contract should not be viewable by NASPO ValuePoint Participating Entity users).**

(a) Hosted Catalog. By providing a hosted catalog, the Contractor is providing a list of its awarded products/services and pricing in an electronic data file in a format acceptable to SciQuest, such as Tab Delimited Text files. In this scenario, the Contractor must submit updated electronic data monthly to the eMarket Center for the Lead State

Contract Administrator's approval to maintain the most up-to-date version of its product/service offering under the cooperative contract in the eMarket Center.

(b) Punch-Out Catalog. By providing a punch-out catalog, the Contractor is providing its own online catalog, which must be capable of being integrated with the eMarket Center as a. Standard punch-in via Commerce extensible Markup Language (cXML). In this scenario, the Contractor shall validate that its online catalog is up-to-date by providing a written update on a monthly basis to the Lead State Contract Administrator stating they have audited the offered products/services and pricing listed on its online catalog. The site must also return detailed UNSPSC codes (as outlined in line 3) for each line item. Contractor also agrees to provide e-Quote functionality to facilitate volume discounts.

d. Revising Pricing and Product Offerings: Any revisions (whether an increase or decrease) to pricing or product/service offerings (new products, altered SKUs, etc.) must be pre-approved by the Lead State Contract Administrator and shall be subject to any other applicable restrictions with respect to the frequency or amount of such revisions. However, no cooperative contract enabled in the eMarket Center may include price changes on a more frequent basis than once per quarter. The following conditions apply with respect to hosted catalogs:

(1). Updated pricing files are required by the 1st of the month and shall go into effect in the eMarket Center on the 1st day of the following month (i.e. file received on 1/01/13 would be effective in the eMarket Center on 2/01/13)]. Files received after the 1st of the month may be delayed up to a month (i.e. file received on 11/06/09 would be effect in the eMarket Center on 1/01/10).

(2) Lead State Contract Administrator-approved price changes are not effective until implemented within the eMarket Center. Errors in the Contractor's submitted pricing files will delay the implementation of the price changes in eMarket Center.

e. Supplier Network Requirements: Contractor shall join the SciQuest Supplier Network (SQSN) and shall use the SciQuest's Supplier Portal to import the Contractor's catalog and pricing, into the SciQuest system, and view reports on catalog spend and product/pricing freshness. The Contractor can receive orders through electronic delivery (coml.) or through low-tech options

such as fax. More information about the SQSN can be found at: www.sciquest.com or call the SciQuest Supplier Network Services team at 800-233-1121.

f. Minimum Requirements: Whether the Contractor is providing a hosted catalog or a punch-out catalog, the Contractor agrees to meet the following requirements:

(1) Catalog must contain the most current pricing, including all applicable administrative fees and/or discounts, as well as the most up-to-date product/service offering the Contractor is authorized to provide in accordance with the cooperative contract; and

(2) The accuracy of the catalog must be maintained by Contractor throughout the duration of the cooperative contract between the Contractor and the Contract Administrator; and

(3) The Catalog must include a Lead State contract identification number; and

(4) The Catalog must include detailed product line item descriptions; and

(5) The Catalog must include pictures when possible; and

(6) The Catalog must include any additional NASPO ValuePoint and Participating Addendum requirements. Although suppliers in the SQSN normally submit one (1) catalog, it is possible to have multiple contracts applicable to different NASPO ValuePoint Participating Entities. For example, a supplier may have different pricing for state government agencies and Board of Regents institutions. Suppliers have the ability and responsibility to submit separate contract pricing for the same catalog if applicable. The system will deliver the appropriate contract pricing to the user viewing the catalog.

g. Order Acceptance Requirements: Contractor must be able to accept Purchase Orders via fax or cXML. The Contractor shall provide positive confirmation via phone or email within 24 hours of the Contractor's receipt of the Purchase Order. If the Purchasing Order is received after 3pm

EST on the day before a weekend or holiday, the Contractor must provide positive confirmation via phone or email on the next business day.

h. UNSPSC Requirements: Contractor shall support use of the United Nations Standard Product and Services Code (UNSPSC). UNSPSC versions that must be adhered to are driven by SciQuest for the suppliers and are upgraded every year. NASPO ValuePoint reserves the right to migrate to future versions of the UNSPSC and the Contractor shall be required to support the migration effort. All line items, goods or services provided under the resulting statewide contract must be associated to a UNSPSC code. All line items must be identified at the most detailed UNSPSC level indicated by segment, family, class and commodity. More information about the UNSPSC is available at: http://www.unspsc.com and http://www.unspsc.com/FAQs.asp#howdoesunspscwork.

i. Applicability: Contractor agrees that NASPO ValuePoint controls which contracts appear in the eMarket Center and that NASPO ValuePoint may elect at any time to remove any supplier's offering from the eMarket Center.

j. The Lead State Contract Administrator reserves the right to approve the pricing on the eMarket Center. This catalog review right is solely for the benefit of the Lead State Contract Administrator and Participating Entities, and the review and approval shall not waive the requirement that products and services be offered at prices (and approved fees) required by the Master Agreement.

k. Several NASPO ValuePoint Participating Entities currently maintain separate SciQuest eMarketplaces, these Participating Entities do enable certain NASPO ValuePoint Cooperative Contracts. In the event one of these entities elects to use this NASPO ValuePoint Cooperative Contract (available through the eMarket Center) but publish to their own eMarketplace, the Contractor agrees to work in good faith with the entity and NASPO ValuePoint to implement the catalog. NASPO ValuePoint does not anticipate that this will require substantial additional efforts by the Contractor; however, the supplier agrees to take commercially reasonable efforts to enable such separate SciQuest catalogs.

ATTACHMENT B: PAYMENT PROVISIONS

Contract Sum: The State shall pay Contractor compensation as follows:

1. All prices and rates must be guaranteed for a one year period. Following the initial Master Agreement period, any request for price or rate adjustment must be for an equal guarantee period, and must be made at least sixty (60) days prior to the effective date. Requests for price or rate adjustment must include sufficient documentation supporting the request. Any adjustment or amendment to the Master Agreement shall not be effective unless approved by the Lead State Contract Administrator. No retroactive adjustments to prices or rates will be allowed.
2. The State shall not be responsible for any unauthorized expenses or services incurred and/or performed by Contractor.
3. Contractor shall submit invoicing to the ordering institution or agency and shall specify the address to which payments will be sent and shall include:

    - A numbered invoice.
    - Contract number that the invoice is to be paid from;

4. This agreement represents the entire agreement between the parties; No changes, modifications, or amendments in the terms and conditions of this contract shall be effective unless reduced to writing, numbered and signed by the duly authorized representative of the State and Contractor.

5. The State shall not pay for any unauthorized labor, materials, equipment or expenses of Contractor.

6. Any products or services outside of this agreement shall not be allowed.

7. Payment Terms: Net 30. The State has 30 days from the date the state receives an invoice **with full and complete supporting documentation** to exercise its right to bill or credit adjustments made necessary by internal audits and quality assurance checks.

Attachment B1: Price Schedule

	IRONHAWK			
			FOB Destination	
STATE:		ESTIMATED	UNIT PRICE	TOTAL
Item #	DESCRIPTION	QUANTITY		
	Curb runners & nose piece)			
56	Part # CR6312FL - Left Curb Runner	140	76.53	$10,714.20
	QUOTING: MFR: Unique - Part #SG126112LL			
	DELIVERY ARO: 45 /DAYS			
57	Part #CR6312FR - Right Curb Runner	10	76.53	$765.30
	QUOTING: MFR: Unique - Part #SG126112LR			
	DELIVERY ARO: 45 /DAYS			
	Curb runners & nose piece)			
56	Part # CR6312FL - Left Curb Runner	140	$76.53	$10,714.20
	QUOTING: MFR: Unique - Part #SG126112LL			
	DELIVERY ARO: 45 /DAYS			
57	Part #CR6312FR - Right Curb Runner	10	$76.53	$765.30
	QUOTING: MFR: Unique - Part #SG126112LR			
	DELIVERY ARO: 45 /DAYS			
24	BLADE, SNOPLOW JOMA, 36" CARB ADAPT,TXT	113	261.43	$29,541.59
	QUOTING: MFR: Ironhawk Contracted Mfr(s) Kennametal Inc/McSweeney - Part #AB36A7			
	DELIVERY ARO: 45 /DAYS			
25	BLADE, SNOPLOW JOMA, 36" STRAP JM20315s	68	22.41	$1,523.88
	QUOTING: MFR: Unique - Part #LE36CB			
	DELIVERY ARO: 45 /DAYS			
26	BLADE, SNOPLOW JOMA, 36" X 6", JM20315	251		$0.00
	QUOTING: MFR:			
	DELIVERY ARO: /DAYS			
27	BLADE, SNOPLOW JOMA, 48" CARB ADAPT,TXT	283	348.57	$98,645.31
	QUOTING: MFR: Ironhawk Contracted Mfr(s) Kennametal Inc/McSweeney - Part #AB48A7			
	DELIVERY ARO: 45 /DAYS			
28	BLADE, SNOPLOW JOMA, 48" STRAP JM20415s	170	29.88	$5,079.60
	QUOTING: MFR: Unique - Part #LE48CB			
	DELIVERY ARO: 45 /DAYS			
33	BLADE, SNOWPLOW CURB SHOE (L) PC6312EL	1,165	$140.34	$163,496.10
	QUOTING: MFR: Unique - Part #BP126138CL			
	DELIVERY ARO: 14-21 /DAYS			
34	BLADE, SNOWPLOW CURB SHOE (R) PC6312ER	854	$140.34	$119,850.36
	QUOTING: MFR: Unique - Part #BP126138CR			
	DELIVERY ARO: 14-21 /DAYS			
	Curb Runner universal Winter CR463U	100	$78.33	$7,833.00
	QUOTING: MFR: Unique - Part #UG-478			
	DELIVERY ARO: 14-21 /DAYS			
	Plow guard 6"x 21" x 1-1/8" Winter PS6412E	1,500	$112.08	$168,120.00
	QUOTING: MFR: Unique - Part #BP126136S			
	DELIVERY ARO: 14-21 /DAYS			
	Plow Systems			
	Ironhawk lake effect PBA-LE11	30	$2,996.00	$89,880.00
	QUOTING: MFR: Ironhawk Contracted Mfr(s) Superior R & T / Kennametal Inc - Part #PBA-LE11			
	DELIVERY ARO: 45 /DAYS			
	Ironhawk lake effect PBA-LE12	30	$3,213.97	$96,419.10
	QUOTING: MFR: Ironhawk Contracted Mfr(s) Superior R & T / Kennametal Inc - Part #PBA-LE12			
	DELIVERY ARO: 45 /DAYS			
	OTHER BLADES OR BLADE SYSTEMS			
State:	VERMONT, MASSACHUSSETS, MAINE, NEW HAMPSHIRE, CONNECTICUT & NEW YORK			
	OTHER BLADES OR BLADE SYSTEMS			
		QUANTITY	UNIT PRICE	TOTAL
1	Articulating Carbide Plow Blade, Lake Effect Assembly 8 ft, 12" or 8" OC	100	$2,308.07	$230,807.00
	QUOTING: MFR: Ironhawk Contracted Mfr(s) Superior R & T / Kennametal Inc - Part #PBA-LE8			
	DELIVERY ARO: 45 /DAYS			
2	Articulating Carbide Plow Blade, Lake Effect Assembly 8 ft (replacement),12" or 8" OC	100	$1,466.20	$146,620.00
	QUOTING: MFR: Ironhawk Contracted Mfr(s) Superior R & T / Kennametal Inc - Part #PBA-LE8R			
	DELIVERY ARO: 45 /DAYS			
3	Articulating Carbide Plow Blade, Lake Effect Assembly 9 ft, 12" or 8" OC	100	$2,626.73	$262,673.00
	QUOTING: MFR: Ironhawk Contracted Mfr(s) Superior R & T / Kennametal Inc - Part #PBA-LE9			
	DELIVERY ARO: 45 /DAYS			
4	Articulating Carbide Plow Blade, Lake Effect Assembly 9 ft (replacement),12" or 8" OC	100	$1,705.85	$170,585.00
	QUOTING: MFR: Ironhawk Contracted Mfr(s) Superior R & T / Kennametal Inc- Part #PBA-LE9R			
	DELIVERY ARO: 45 /DAYS			
5	Articulating Carbide Plow Blade, Lake Effect Assembly 10 ft, 12" or 8" OC	100	$2,879.32	$287,932.00
	QUOTING: MFR: Ironhawk Contracted Mfr(s) Superior R & T / Kennametal Inc - Part #PBA-LE10			
	DELIVERY ARO: 45 /DAYS			
6	Articulating Carbide Plow Blade, Lake Effect Assembly 10 ft (replacement),12" or 8" OC	100	$1,879.65	$187,965.00
	QUOTING: MFR: Ironhawk Contracted Mfr(s) Superior R & T / Kennametal Inc - Part #PBA-LE10R			
	DELIVERY ARO: 45 /DAYS			

7	Articulating Carbide Plow Blade, Lake Effect Assembly 11 ft, 12" or 8" OC QUOTING: MFR: Ironhawk Contracted Mfr(s) Superior R & T / Kennametal Inc - Part #PBA-LE11 DELIVERY ARO: 45 /DAYS	100	$3,134.28	$313,428.00
8	Articulating Carbide Plow Blade, Lake Effect Assembly 11 ft (replacement),12" or 8" OC QUOTING: MFR: Ironhawk Contracted Mfr(s) Superior R & T / Kennametal Inc- Part #PBA-LE11R DELIVERY ARO: 45 /DAYS	100	$2,022.48	$202,248.00
9	Articulating Carbide Plow Blade, Lake Effect Assembly 12 ft, 12" or 8" OC QUOTING: MFR: Ironhawk Contracted Mfr(s) Superior R & T / Kennametal Inc - Part #PBA-LE12 DELIVERY ARO: 45 /DAYS	100	$3,389.23	$338,923.00
10	Articulating Carbide Plow Blade, Lake Effect Assembly 12 ft (replacement),12" or 8" OC QUOTING: MFR: Ironhawk Contracted Mfr(s) Superior R & T / Kennametal Inc - Part #PBA-LE12R DELIVERY ARO: 45 /DAYS	100	$2,165.30	$216,530.00
11	Articulating Carbide Plow Blade, Lake Effect Assembly 14 ft, 12" or 8" OC QUOTING: MFR: Ironhawk Contracted Mfr(s) Superior R & T / Kennametal Inc- Part #PBA-LE14 DELIVERY ARO: 45 /DAYS	100	$3,970.89	$397,089.00
12	Articulating Carbide Plow Blade, Lake Effect Assembly 14 ft (replacement),12" or 8" OC QUOTING: MFR: Ironhawk Contracted Mfr(s) Superior R & T / Kennametal Inc - Part #PBA-LE14R DELIVERY ARO: 45 /DAYS	100	$2,513.74	$251,374.00
13	Articulating Carbide Plow Blade, Lake Effect, 3 ft blade QUOTING: MFR: Ironhawk Contracted Mfr(s) Superior R & T / Kennametal Inc - Part #LE36 DELIVERY ARO: 45 /DAYS	100	$521.05	$52,105.00
14	Articulating Carbide Plow Blade, Lake Effect, 4 ft blade QUOTING: MFR: Ironhawk Contracted Mfr(s) Superior R & T / Kennametal Inc - Part #LE48 DELIVERY ARO: 45 /DAYS	100	$694.73	$69,473.00
15	Blade, Adaptor for Lake Effect, 3 ft QUOTING: MFR: Ironhawk Contracted Mfr(s) Kennametal Inc/McSweeney - Part #AB36A7 DELIVERY ARO: 45 /DAYS	100	$261.42	$26,142.00
16	Blade, Adaptor for Lake Effect, 4 ft QUOTING: MFR: Ironhawk Contracted Mfr(s) Kennametal Inc/McSweeney - Part #AB48A7 DELIVERY ARO: 45 /DAYS	100	$348.57	$34,857.00
17	Blade, Clamp Bar for Articulating Blade, 3 ft QUOTING: MFR: Unique - Part #LE36CB DELIVERY ARO: 45 /DAYS	100	$23.89	$2,389.00
18	Blade, Clamp Bar for Articulating Blade, 4 ft QUOTING: MFR: Unique - Part #LE48CB DELIVERY ARO: 45 /DAYS	100	$31.85	$3,185.00
19	Guard, Articulating Blade (Left - driver side) QUOTING: MFR: Unique - Part #SG126112LL DELIVERY ARO: 45 /DAYS	100	$76.53	$7,653.00
20	Guard, Articulating Blade (Right - passenger side) QUOTING: MFR: Unique - Part #SG126112LR DELIVERY ARO: 45 /DAYS	100	$76.53	$7,653.00
21	Guard, Articulating Blade (Center) QUOTING: MFR: Unique - Part #SG126112L DELIVERY ARO: 45 /DAYS	100	$93.66	$9,366.00
22	Hardware, Bolt Kit for Lake Effect Assembly (Initial) - Up to 12' QUOTING: MFR: Chula Ind. - Part #KIT-LE12 DELIVERY ARO: 45 /DAYS	100	$43.24	$4,324.00
23	Hardware, Bolt Kit for Lake Effect Assembly (Replacement) - Up to 12' QUOTING: MFR: Chula Ind. - Part #KIT-LE12R DELIVERY ARO: 45 /DAYS	100	$28.90	$2,890.00
24	Hardware, Bolt Kit for Lake Effect Assembly (Initial) - Up to 14' QUOTING: MFR: Chula Ind. - Part #KIT-LE14 DELIVERY ARO: 45 /DAYS	100	$50.72	$5,072.00
25	Hardware, Bolt Kit for Lake Effect Assembly (Replacement) - Up to 14' QUOTING: MFR: Chula Ind - Part #KIT-LE14R DELIVERY ARO: 45 /DAYS	100	$24.90	$2,490.00
26	Blade, Ice-O-Force Inter-Locking Assembly 8 ft QUOTING: MFR: Ironhawk Contracted Mfr(s) Superior R & T / Kennametal Inc/ McSweeney - Part #PBA-IF8-INT DELIVERY ARO: 21-30 /DAYS	100	$1,094.18	$109,418.00
27	Blade, Ice-O-Force Inter-Locking Assembly 9 ft QUOTING: MFR: Ironhawk Contracted Mfr(s) Superior R & T / Kennametal Inc/ McSweeney - Part #PBA-IF9-INT DELIVERY ARO: 21-30 /DAYS	100	$1,241.38	$124,138.00
28	Blade, Ice-O-Force Inter-Locking Assembly 10 ft QUOTING: MFR: Ironhawk Contracted Mfr(s) Superior R & T / Kennametal Inc/ McSweeney - Part #PBA-IF10-INT DELIVERY ARO: 21-30 /DAYS	100	$1,371.72	$137,172.00
29	Blade, Ice-O-Force Inter-Locking Assembly 11 ft QUOTING: MFR: Ironhawk Contracted Mfr(s) Superior R & T / Kennametal Inc/ McSweeney - Part #PBA-IF11-INT DELIVERY ARO: 21-30 /DAYS	100	$1,502.06	$150,206.00
30	Blade, Ice-O-Force Inter-Locking Assembly 12 ft QUOTING: MFR: Ironhawk Contracted Mfr(s) Superior R & T / Kennametal Inc/ McSweeney - Part #PBA-IF12-INT DELIVERY ARO: 21-30 /DAYS	100	$1,632.40	$163,240.00
31	Blade, Ice-O-Force Inter-Locking Assembly 14 ft QUOTING: MFR: Ironhawk Contracted Mfr(s) Superior R & T / Kennametal Inc/ McSweeney - Part #PBA-IF14-INT DELIVERY ARO: 21-30 /DAYS	100	$1,911.64	$191,164.00
32	Blade, Ice-O-Force Inter-Locking Carbide, 3/4" x 6" x 36" QUOTING: MFR: Ironhawk Contracted Mfr(s) Kennametal Inc/ McSweeney - Part #IO-36CIL	100	$279.06	$27,906.00

	DELIVERY ARO: 21-30 /DAYS			
33	Blade, Ice-O-Force Inter-Locking Carbide, 3/4" x 6" x 48" QUOTING: MFR: Ironhawk Contracted Mfr(s) Kennametal Inc/ McSweeney - Part #IO-48CIL DELIVERY ARO: 21-30 /DAYS	100	$372.08	$37,208.00
34	Blade, Grader/Underbody, Ice-O-Force w/ cover plate, beveled Carbide, 7/8" x 5" x 36" QUOTING: MFR: Ironhawk Contracted Mfr(s) Kennametal Inc/ McSweeney - Part #IO-36C7B-AR DELIVERY ARO: 21-30 /DAYS	100	$282.92	$28,292.00
34	Blade, Grader/Underbody, Ice-O-Force, beveled Carbide, 7/8" x 5" x 48" QUOTING: MFR: Ironhawk Contracted Mfr(s) Kennametal Inc/ McSweeney - Part #IO-48C7B-AR DELIVERY ARO: 21-30 /DAYS	100	$301.19	$30,119.00
36	Blade, Ice-O-Force Urethane Dampener, 3 ft QUOTING: MFR: Superior R & T - Part #IO-36UD DELIVERY ARO: 21-30 /DAYS	100	$72.15	$7,215.00
37	Blade, Ice-O-Force Urethane Dampener, 4 ft QUOTING: MFR: Superior R & T - Part #IO-48UD DELIVERY ARO: 21-30 /DAYS	100	$96.20	$9,620.00
38	Blade, Ice-O-Force Clamp Bar, 3 ft QUOTING: MFR: Unique - Part #IO-36CB DELIVERY ARO: 21-30 /DAYS	100	$40.20	$4,020.00
39	Blade, Ice-O-Force Clamp Bar, 4 ft QUOTING: MFR: Unique - Part #IO-48CB DELIVERY ARO: 21-30 /DAYS	100	$53.60	$5,360.00
40	Hardware, Bolt Kit for Ice-O-Force - Up to 12' QUOTING: MFR: Chula Ind - Part #KIT-IF12 DELIVERY ARO: 21-30 /DAYS	100	$31.58	$3,158.00
41	Hardware, Bolt Kit for Ice-O-Force - 14' QUOTING: MFR: Chula Ind - Part #KIT-IF14 DELIVERY ARO: 21-30 /DAYS	100	$28.80	$2,880.00
42	Blade, Snowplow Blade Protector, Straight End (Left/Driver side) 12" OC QUOTING: MFR: Unique - Part #BP126xxxSEL DELIVERY ARO: 14-21 /DAYS	100	$162.50	$16,250.00
43	Blade, Snowplow Blade Protector, Straight End (Right/Passenger side) 12" OC QUOTING: MFR: Unique - Part #BP126xxxSER DELIVERY ARO: 14-21 /DAYS	100	$162.50	$16,250.00
44	Blade, Snowplow Blade Protector, Curve (Left/Driver side) 12" OC QUOTING: MFR: Unique - Part #BP126xxxCL DELIVERY ARO: 14-21 /DAYS	100	$140.34	$14,034.00
45	Blade, Snowplow Blade Protector, Curve (Right/Passenger side) 12" OC QUOTING: MFR: Unique - Part #BP126xxxCR DELIVERY ARO: 14-21 /DAYS	100	$140.34	$14,034.00
46	Blade, Snowplow Blade Protector, Straight 12" OC QUOTING: MFR: Unique - Part #BP126xxxS DELIVERY ARO: 14-21 /DAYS	100	$116.21	$11,621.00
47	Blade, Snowplow Blade Protector, Straight Mini 12" OC QUOTING: MFR: Unique - Part #BP126xxxSM DELIVERY ARO: 14-21 /DAYS	100	$67.49	$6,749.00
48	Blade, Snowplow Blade Protector, Straight End (Left/Driver side) 12" OC QUOTING: MFR: Unique - Part #BP86xxxSEL DELIVERY ARO: 14-21 /DAYS	100	$162.50	$16,250.00
49	Blade, Snowplow Blade Protector, Straight End (Right/Passenger side) 8" OC QUOTING: MFR: Unique - Part #BP86xxxSER DELIVERY ARO: 14-21 /DAYS	100	$162.50	$16,250.00
50	Blade, Snowplow Blade Protector, Curve (Left/Driver side) 8" OC QUOTING: MFR: Unique - Part #BP86xxxCL DELIVERY ARO: 14-21 /DAYS	100	$140.34	$14,034.00
51	Blade, Snowplow Blade Protector, Curve (Right/Passenger side) 8" OC QUOTING: MFR: Unique - Part #BP86xxxCR DELIVERY ARO: 14-21 /DAYS	100	$140.34	$14,034.00
52	Blade, Snowplow Blade Protector, Straight 8" OC QUOTING: MFR: Unique - Part #BP86xxxS DELIVERY ARO: 14-21 /DAYS	100	$116.21	$11,621.00
53	Blade, Snowplow Blade Protector, Straight Mini 8" OC QUOTING: MFR: Unique - Part #BP86xxxSM DELIVERY ARO: 14-21 /DAYS	100	$67.49	$6,749.00
54	Blade, Snowplow Blade Protector AR, Curve (Left/Driver side) 12" OC QUOTING: MFR: Unique - Part #BP126xxxARL DELIVERY ARO: 14-21 /DAYS	100	$167.57	$16,757.00
55	Blade, Snowplow Blade Protector AR, Curve (Right/Passenger side) 12" OC QUOTING: MFR:Unique - Part #BP126xxxARR DELIVERY ARO: 14-21 /DAYS	100	$167.57	$16,757.00
56	Blade, Snowplow Blade Protector AR, Straight 12" OC QUOTING: MFR: Unique - Part #BP126xxxAR DELIVERY ARO: 14-21 /DAYS	100	$131.07	$13,107.00
57	Blade, Universal Plow Guard, 7/8" x 4" QUOTING: MFR: Unique - Part #UG-478 DELIVERY ARO: 14-21 /DAYS	100	$75.98	$7,598.00
State:	COLORADO, UTAH, IDAHO, & NEBRASKA			

Attachment B1: Price Schedule

	OTHER BLADES OR BLADE SYSTEMS	QUANTITY	UNIT PRICE	TOTAL
1	Articulating Carbide Plow Blade, Lake Effect Assembly 8 ft, 12" or 8" OC QUOTING: MFR: Ironhawk Contracted Mfr(s) Superior R & T / Kennametal Inc - Part #PBA-LE8 DELIVERY ARO: 45 /DAYS	100	$2,355.17	$235,517.00
2	Articulating Carbide Plow Blade, Lake Effect Assembly 8 ft (replacement),12" or 8" OC QUOTING: MFR: Ironhawk Contracted Mfr(s) Superior R & T / Kennametal Inc - Part #PBA-LE8R DELIVERY ARO: 45 /DAYS	100	$1,496.12	$149,612.00
3	Articulating Carbide Plow Blade, Lake Effect Assembly 9 ft, 12" or 8" OC QUOTING: MFR: Ironhawk Contracted Mfr(s) Superior R & T / Kennametal Inc - Part #PBA-LE9 DELIVERY ARO: 45 /DAYS	100	$2,680.33	$268,033.00
4	Articulating Carbide Plow Blade, Lake Effect Assembly 9 ft (replacement),12" or 8" OC QUOTING: MFR: Ironhawk Contracted Mfr(s) Superior R & T / Kennametal Inc- Part #PBA-LE9R DELIVERY ARO: 45 /DAYS	100	$1,740.66	$174,066.00
5	Articulating Carbide Plow Blade, Lake Effect Assembly 10 ft, 12" or 8" OC QUOTING: MFR: Ironhawk Contracted Mfr(s) Superior R & T / Kennametal Inc - Part #PBA-LE10 DELIVERY ARO: 45 /DAYS	100	$2,938.08	$293,808.00
6	Articulating Carbide Plow Blade, Lake Effect Assembly 10 ft (replacement),12" or 8" OC QUOTING: MFR: Ironhawk Contracted Mfr(s) Superior R & T / Kennametal Inc - Part #PBA-LE10R DELIVERY ARO: 45 /DAYS	100	$1,918.00	$191,800.00
7	Articulating Carbide Plow Blade, Lake Effect Assembly 11 ft, 12" or 8" OC QUOTING: MFR: Ironhawk Contracted Mfr(s) Superior R & T / Kennametal Inc - Part #PBA-LE11 DELIVERY ARO: 45 /DAYS	100	$2,996.00	$299,600.00
8	Articulating Carbide Plow Blade, Lake Effect Assembly 11 ft (replacement),12" or 8" OC QUOTING: MFR: Ironhawk Contracted Mfr(s) Superior R & T / Kennametal Inc- Part #PBA-LE11R DELIVERY ARO: 45 /DAYS	100	$2,063.75	$206,375.00
9	Articulating Carbide Plow Blade, Lake Effect Assembly 12 ft, 12" or 8" OC QUOTING: MFR: Ironhawk Contracted Mfr(s) Superior R & T / Kennametal Inc - Part #PBA-LE12 DELIVERY ARO: 45 /DAYS	100	$3,213.97	$321,397.00
10	Articulating Carbide Plow Blade, Lake Effect Assembly 12 ft (replacement),12" or 8" OC QUOTING: MFR: Ironhawk Contracted Mfr(s) Superior R & T / Kennametal Inc - Part #PBA-LE12R DELIVERY ARO: 45 /DAYS	100	$2,209.48	$220,948.00
11	Articulating Carbide Plow Blade, Lake Effect Assembly 14 ft, 12" or 8" OC QUOTING: MFR: Ironhawk Contracted Mfr(s) Superior R & T / Kennametal Inc - Part #PBA-LE14 DELIVERY ARO: 45 /DAYS	100	$4,051.92	$405,192.00
12	Articulating Carbide Plow Blade, Lake Effect Assembly 14 ft (replacement),12" or 8" OC QUOTING: MFR: Ironhawk Contracted Mfr(s) Superior R & T / Kennametal Inc - Part #PBA-LE14R DELIVERY ARO: 45 /DAYS	100	$2,513.74	$251,374.00
13	Articulating Carbide Plow Blade, Lake Effect, 3 ft blade QUOTING: MFR: Ironhawk Contracted Mfr(s) Superior R & T / Kennametal Inc - Part #LE36 DELIVERY ARO: 45 /DAYS	100	$537.16	$53,716.00
14	Articulating Carbide Plow Blade, Lake Effect, 4 ft blade QUOTING: MFR: Ironhawk Contracted Mfr(s) Surperior R & T / Kennametal Inc - Part #LE48 DELIVERY ARO: 45 /DAYS	100	$716.21	$71,621.00
15	Blade, Adaptor for Lake Effect, 3 ft QUOTING: MFR: Ironhawk Contracted Mfr(s) Kennametal Inc/McSweeney - Part #AB36A7 DELIVERY ARO: 45 /DAYS	100	$261.43	$26,143.00
16	Blade, Adaptor for Lake Effect, 4 ft QUOTING: MFR: Ironhawk Contracted Mfr(s) Kennametal Inc/McSweeney - Part #AB48A7 DELIVERY ARO: 45 /DAYS	100	$348.57	$34,857.00
17	Blade, Clamp Bar for Articulating Blade, 3 ft QUOTING: MFR: Unique - Part #LE36CB DELIVERY ARO: 45 /DAYS	100	$22.41	$2,241.00
18	Blade, Clamp Bar for Articulating Blade, 4 ft QUOTING: MFR: Unique - Part #LE48CB DELIVERY ARO: 45 /DAYS	100	$29.88	$2,988.00
19	Guard, Articulating Blade (Left - driver side) QUOTING: MFR: Unique - Part #SG126112LL DELIVERY ARO: 45 /DAYS	100	$76.53	$7,653.00
20	Guard, Articulating Blade (Right - passenger side) QUOTING: MFR: Unique - Part #SG126112LR DELIVERY ARO: 45 /DAYS	100	$76.53	$7,653.00
21	Guard, Articulating Blade (Center) QUOTING: MFR: Unique - Part #SG126112L DELIVERY ARO: 45 /DAYS	100	$96.55	$9,655.00
22	Hardware, Bolt Kit for Lake Effect Assembly (Initial) - Up to 12' QUOTING: MFR: Chula Ind. - Part #KIT-LE12 DELIVERY ARO: 45 /DAYS	100	$44.57	$4,457.00
23	Hardware, Bolt Kit for Lake Effect Assembly (Replacement) - Up to 12' QUOTING: MFR: Chula Ind. - Part #KIT-LE12R DELIVERY ARO: 45 /DAYS	100	$29.70	$2,970.00
24	Hardware, Bolt Kit for Lake Effect Assembly (Initial) - Up to 14' QUOTING: MFR: Chula Ind. - Part #KIT-LE14 DELIVERY ARO: 45 /DAYS	100	$52.28	$5,228.00
25	Hardware, Bolt Kit for Lake Effect Assembly (Replacement) - Up to 14' QUOTING: MFR: Chula Ind - Part #KIT-LE14R DELIVERY ARO: 45 /DAYS	100	$25.67	$2,567.00
26	Blade, Ice-O-Force Inter-Locking Assembly 8 ft	100	$1,128.00	$112,800.00

	QUOTING: MFR: Ironhawk Contracted Mfr(s) Superior R & T / Kennametal Inc/ McSweeney - Part #PBA-IF8-INT DELIVERY ARO: _21-30_____/DAYS			
27	Blade, Ice-O-Force Inter-Locking Assembly 9 ft QUOTING: MFR: Ironhawk Contracted Mfr(s) Superior R & T / Kennametal Inc/ McSweeney - Part #PBA-IF9-INT DELIVERY ARO: _21-30_____/DAYS	100	$1,279.77	$127,977.00
28	Blade, Ice-O-Force Inter-Locking Assembly 10 ft QUOTING: MFR: Ironhawk Contracted Mfr(s) Superior R & T / Kennametal Inc/ McSweeney - Part #PBA-IF10-INT DELIVERY ARO: _21-30_____/DAYS	100	$1,414.14	$141,414.00
29	Blade, Ice-O-Force Inter-Locking Assembly 11 ft QUOTING: MFR: Ironhawk Contracted Mfr(s) Superior R & T / Kennametal Inc/ McSweeney - Part #PBA-IF11-INT DELIVERY ARO: _21-30_____/DAYS	100	$1,548.52	$154,852.00
30	Blade, Ice-O-Force Inter-Locking Assembly 12 ft QUOTING: MFR: Ironhawk Contracted Mfr(s) Superior R & T / Kennametal Inc/ McSweeney - Part #PBA-IF12-INT DELIVERY ARO: _21-30_____/DAYS	100	$1,682.88	$168,288.00
31	Blade, Ice-O-Force Inter-Locking Assembly 14 ft QUOTING: MFR: Ironhawk Contracted Mfr(s) Superior R & T / Kennametal Inc/ McSweeney - Part #PBA-IF14-INT DELIVERY ARO: _21-30_____/DAYS	100	$1,970.76	$197,076.00
32	Blade, Ice-O-Force Inter-Locking Carbide, 3/4" x 6" x 36" QUOTING: MFR: Ironhawk Contracted Mfr(s) Kennametal Inc/ McSweeney - Part #IO-36CIL DELIVERY ARO: _21-30_____/DAYS	100	$287.69	$28,769.00
33	Blade, Ice-O-Force Inter-Locking Carbide, 3/4" x 6" x 48" QUOTING: MFR: Ironhawk Contracted Mfr(s) Kennametal Inc/ McSweeney - Part #IO-48CIL DELIVERY ARO: _21-30_____/DAYS	100	$383.59	$38,359.00
34	Blade, Grader/Underbody, Ice-O-Force w/ cover plate, beveled Carbide, 7/8" x 5" x 36" QUOTING: MFR: Ironhawk Contracted Mfr(s) Kennametal Inc/ McSweeney - Part #IO-36C7B-AR DELIVERY ARO: _21-30_____/DAYS	100	$291.67	$29,167.00
34	Blade, Grader/Underbody, Ice-O-Force, beveled Carbide, 7/8" x 5" x 48" QUOTING: MFR: Ironhawk Contracted Mfr(s) Kennametal Inc/ McSweeney - Part #IO-48C7B-AR DELIVERY ARO: _21-30_____/DAYS	100	$310.50	$31,050.00
36	Blade, Ice-O-Force Urethane Dampener, 3 ft QUOTING: MFR: Superior R & T - Part #IO-36UD DELIVERY ARO: _21-30_____/DAYS	100	$74.38	$7,438.00
37	Blade, Ice-O-Force Urethane Dampener, 4 ft QUOTING: MFR: Superior R & T - Part #IO-48UD DELIVERY ARO: _21-30_____/DAYS	100	$99.17	$9,917.00
38	Blade, Ice-O-Force Clamp Bar, 3 ft QUOTING: MFR: Unique - Part #IO-36CB DELIVERY ARO: _21-30_____/DAYS	100	$41.44	$4,144.00
39	Blade, Ice-O-Force Clamp Bar, 4 ft QUOTING: MFR: Unique - Part #IO-48CB DELIVERY ARO: _21-30_____/DAYS	100	$55.25	$5,525.00
40	Hardware, Bolt Kit for Ice-O-Force - Up to 12' QUOTING: MFR: Chula Ind - Part #KIT-IF12 DELIVERY ARO: _21-30_____/DAYS	100	$32.56	$3,256.00
41	Hardware, Bolt Kit for Ice-O-Force - 14' QUOTING: MFR: Chula Ind - Part #KIT-IF14 DELIVERY ARO: _21-30_____/DAYS	100	$29.69	$2,969.00
42	Blade, Snowplow Blade Protector, Straight End (Left/Driver side) 12" OC QUOTING: MFR: Unique - Part #BP126xxxSEL DELIVERY ARO: _14-21_____/DAYS	100	$162.50	$16,250.00
43	Blade, Snowplow Blade Protector, Straight End (Right/Passenger side) 12" OC QUOTING: MFR: Unique - Part #BP126xxxSER DELIVERY ARO: _14-21_____/DAYS	100	$162.50	$16,250.00
44	Blade, Snowplow Blade Protector, Curve (Left/Driver side) 12" OC QUOTING: MFR: Unique - Part #BP126xxxCL DELIVERY ARO: _14-21_____/DAYS	100	$140.34	$14,034.00
45	Blade, Snowplow Blade Protector, Curve (Right/Passenger side) 12" OC QUOTING: MFR: Unique - Part #BP126xxxCR DELIVERY ARO: _14-21_____/DAYS	100	$140.34	$14,034.00
46	Blade, Snowplow Blade Protector, Straight 12" OC QUOTING: MFR: Unique - Part #BP126xxxS DELIVERY ARO: _14-21_____/DAYS	100	$116.21	$11,621.00
47	Blade, Snowplow Blade Protector, Straight Mini 12" OC QUOTING: MFR: Unique - Part #BP126xxxSM DELIVERY ARO: _14-21_____/DAYS	100	$67.49	$6,749.00
48	Blade, Snowplow Blade Protector, Straight End (Left/Driver side) 12" OC QUOTING: MFR: Unique - Part #BP86xxxSEL DELIVERY ARO: _14-21_____/DAYS	100	$162.50	$16,250.00
49	Blade, Snowplow Blade Protector, Straight End (Right/Passenger side) 8" OC QUOTING: MFR: Unique - Part #BP86xxxSER DELIVERY ARO: _14-21_____/DAYS	100	$162.50	$16,250.00
50	Blade, Snowplow Blade Protector, Curve (Left/Driver side) 8" OC QUOTING: MFR: Unique - Part #BP86xxxCL DELIVERY ARO: _14-21_____/DAYS	100	$140.34	$14,034.00
51	Blade, Snowplow Blade Protector, Curve (Right/Passenger side) 8" OC QUOTING: MFR: Unique - Part #BP86xxxCR DELIVERY ARO: _14-21_____/DAYS	100	$143.29	$14,329.00

52	Blade, Snowplow Blade Protector, Straight 8" OC QUOTING: MFR: Unique - Part #BP86xxxS DELIVERY ARO: 14-21 /DAYS	100	$119.80	$11,980.00
53	Blade, Snowplow Blade Protector, Straight Mini 8" OC QUOTING: MFR: Unique - Part #BP86xxxSM DELIVERY ARO: 14-21 /DAYS	100	$69.57	$6,957.00
54	Blade, Snowplow Blade Protector AR, Curve (Left/Driver side) 12" OC QUOTING: MFR: Unique - Part #BP128xxxARL DELIVERY ARO: 14-21 /DAYS	100	$172.75	$17,275.00
55	Blade, Snowplow Blade Protector AR, Curve (Right/Passenger side) 12" OC QUOTING: MFR:Unique - Part #BP128xxxARR DELIVERY ARO: 14-21 /DAYS	100	$172.75	$17,275.00
56	Blade, Snowplow Blade Protector AR, Straight 12" OC QUOTING: MFR: Unique - Part #BP128xxxAR DELIVERY ARO: 14-21 /DAYS	100	$135.12	$13,512.00
57	Blade, Universal Plow Guard, 7/8" x 4" QUOTING: MFR: Unique - Part #UG-478 DELIVERY ARO: 14-21 /DAYS	100	$78.33	$7,833.00
State:	**ALASKA**			
	OTHER BLADES OR BLADE SYSTEMS	**QUANTITY**	**UNIT PRICE**	**TOTAL**
1	Articulating Carbide Plow Blade, Lake Effect Assembly 8 ft, 12" or 8" OC QUOTING: MFR: Ironhawk Contracted Mfr(s) Superior R & T / Kennametal Inc - Part #PBA-LE8 DELIVERY ARO: 45 /DAYS	100	$3,623.34	$362,333.85
2	Articulating Carbide Plow Blade, Lake Effect Assembly 8 ft (replacement),12" or 8" OC QUOTING: MFR: Ironhawk Contracted Mfr(s) Superior R & T / Kennametal Inc - Part #PBA-LE8R DELIVERY ARO: 45 /DAYS	100	$2,301.72	$230,172.31
3	Articulating Carbide Plow Blade, Lake Effect Assembly 9 ft, 12" or 8" OC QUOTING: MFR: Ironhawk Contracted Mfr(s) Superior R & T / Kennametal Inc - Part #PBA-LE9 DELIVERY ARO: 45 /DAYS	100	$4,123.58	$412,358.46
4	Articulating Carbide Plow Blade, Lake Effect Assembly 9 ft (replacement),12" or 8" OC QUOTING: MFR: Ironhawk Contracted Mfr(s) Superior R & T / Kennametal Inc- Part #PBA-LE9R DELIVERY ARO: 45 /DAYS	100	$2,677.94	$267,793.85
5	Articulating Carbide Plow Blade, Lake Effect Assembly 10 ft, 12" or 8" OC QUOTING: MFR: Ironhawk Contracted Mfr(s) Superior R & T / Kennametal Inc - Part #PBA-LE10 DELIVERY ARO: 45 /DAYS	100	$4,520.12	$452,012.31
6	Articulating Carbide Plow Blade, Lake Effect Assembly 10 ft (replacement),12" or 8" OC QUOTING: MFR: Ironhawk Contracted Mfr(s) Superior R & T / Kennametal Inc - Part #PBA-LE10R DELIVERY ARO: 45 /DAYS	100	$2,950.77	$295,076.92
7	Articulating Carbide Plow Blade, Lake Effect Assembly 11 ft, 12" or 8" OC QUOTING: MFR: Ironhawk Contracted Mfr(s) Superior R & T / Kennametal Inc - Part #PBA-LE11 DELIVERY ARO: 45 /DAYS	100	$4,609.23	$460,923.08
8	Articulating Carbide Plow Blade, Lake Effect Assembly 11 ft (replacement),12" or 8" OC QUOTING: MFR: Ironhawk Contracted Mfr(s) Superior R & T / Kennametal Inc- Part #PBA-LE11R DELIVERY ARO: 45 /DAYS	100	$3,175.00	$317,500.00
9	Articulating Carbide Plow Blade, Lake Effect Assembly 12 ft, 12" or 8" OC QUOTING: MFR: Ironhawk Contracted Mfr(s) Superior R & T / Kennametal Inc - Part #PBA-LE12 DELIVERY ARO: 45 /DAYS	100	$4,944.57	$494,456.92
10	Articulating Carbide Plow Blade, Lake Effect Assembly 12 ft (replacement),12" or 8" OC QUOTING: MFR: Ironhawk Contracted Mfr(s) Superior R & T / Kennametal Inc - Part #PBA-LE12R DELIVERY ARO: 45 /DAYS	100	$3,399.20	$339,920.00
11	Articulating Carbide Plow Blade, Lake Effect Assembly 14 ft, 12" or 8" OC QUOTING: MFR: Ironhawk Contracted Mfr(s) Superior R & T / Kennametal Inc - Part #PBA-LE14 DELIVERY ARO: 45 /DAYS	100	$6,233.72	$623,372.31
12	Articulating Carbide Plow Blade, Lake Effect Assembly 14 ft (replacement),12" or 8" OC QUOTING: MFR: Ironhawk Contracted Mfr(s) Superior R & T / Kennametal Inc - Part #PBA-LE14R DELIVERY ARO: 45 /DAYS	100	$3,867.29	$386,729.23
13	Blade, Ice-O-Force Inter-Locking Assembly 8 ft QUOTING: MFR: Ironhawk Contracted Mfr(s) Superior R & T / Kennametal Inc/ McSweeney - Part #PBA-IF8-INT DELIVERY ARO: 21-30 /DAYS	100	$2,169.23	$216,923.08
14	Blade, Ice-O-Force Inter-Locking Assembly 9 ft QUOTING: MFR: Ironhawk Contracted Mfr(s) Superior R & T / Kennametal Inc/ McSweeney - Part #PBA-IF9-INT DELIVERY ARO: 21-30 /DAYS	100	$2,461.10	$246,109.62
15	Blade, Ice-O-Force Inter-Locking Assembly 10 ft QUOTING: MFR: Ironhawk Contracted Mfr(s) Superior R & T / Kennametal Inc/ McSweeney - Part #PBA-IF10-INT DELIVERY ARO: 21-30 /DAYS	100	$2,719.50	$271,950.00
16	Blade, Ice-O-Force Inter-Locking Assembly 11 ft QUOTING: MFR: Ironhawk Contracted Mfr(s) Superior R & T / Kennametal Inc/ McSweeney - Part #PBA-IF11-INT DELIVERY ARO: 21-30 /DAYS	100	$2,977.92	$297,792.31
17	Blade, Ice-O-Force Inter-Locking Assembly 12 ft QUOTING: MFR: Ironhawk Contracted Mfr(s) Superior R & T / Kennametal Inc/ McSweeney - Part #PBA-IF12-INT DELIVERY ARO: 21-30 /DAYS	100	$3,236.31	$323,630.77
18	Blade, Ice-O-Force Inter-Locking Assembly 14 ft QUOTING: MFR: Ironhawk Contracted Mfr(s) Superior R & T / Kennametal Inc/ McSweeney - Part #PBA-IF14-INT DELIVERY ARO: 21-30 /DAYS	100	$3,789.92	$378,992.31

ATTACHMENT C: STANDARD STATE PROVISIONS
FOR CONTRACTS AND GRANTS

1. **Entire Agreement:** This Agreement, whether in the form of a Contract, State Funded Grant, or Federally Funded Grant, represents the entire agreement between the parties on the subject matter. All prior agreements, representations, statements, negotiations, and understandings shall have no effect.

2. **Applicable Law:** This Agreement will be governed by the laws of the State of Vermont.

3. **Definitions:** For purposes of this Attachment, "Party" shall mean the Contractor, Grantee or Subrecipient, with whom the State of Vermont is executing this Agreement and consistent with the form of the Agreement.

4. **Appropriations:** If this Agreement extends into more than one fiscal year of the State (July 1 to June 30), and if appropriations are insufficient to support this Agreement, the State may cancel at the end of the fiscal year, or otherwise upon the expiration of existing appropriation authority. In the case that this Agreement is a Grant that is funded in whole or in part by federal funds, and in the event federal funds become unavailable or reduced, the State may suspend or cancel this Grant immediately, and the State shall have no obligation to pay Subrecipient from State revenues.

5. **No Employee Benefits For Party:** The Party understands that the State will not provide any individual retirement benefits, group life insurance, group health and dental insurance, vacation or sick leave, workers compensation or other benefits or services available to State employees, nor will the state withhold any state or federal taxes except as required under applicable tax laws, which shall be determined in advance of execution of the Agreement. The Party understands that all tax returns required by the Internal Revenue Code and the State of Vermont, including but not limited to income, withholding, sales and use, and rooms and meals, must be filed by the Party, and information as to Agreement income will be provided by the State of Vermont to the Internal Revenue Service and the Vermont Department of Taxes.

6. **Independence, Liability:** The Party will act in an independent capacity and not as officers or employees of the State.

   The Party shall defend the State and its officers and employees against all claims or suits arising in whole or in part from any act or omission of the Party or of any agent of the Party. The State shall notify the Party in the event of any such claim or suit, and the Party shall immediately retain counsel and otherwise provide a complete defense against the entire claim or suit.

   After a final judgment or settlement the Party may request recoupment of specific defense costs and may file suit in Washington Superior Court requesting recoupment. The Party shall be entitled to recoup costs only upon a showing that such costs were entirely unrelated to the defense of any claim arising from an act or omission of the Party.

   The Party shall indemnify the State and its officers and employees in the event that the State, its officers or employees become legally obligated to pay any damages or losses arising from any act or omission of the Party.

7. **Insurance**: Before commencing work on this Agreement the Party must provide certificates of insurance to show that the following minimum coverages are in effect. It is the responsibility of the Party to maintain current certificates of insurance on file with the state through the term of the Agreement. No warranty is made that the coverages and limits listed

herein are adequate to cover and protect the interests of the Party for the Party's operations. These are solely minimums that have been established to protect the interests of the State.

Workers Compensation: With respect to all operations performed, the Party shall carry workers' compensation insurance in accordance with the laws of the State of Vermont.

General Liability and Property Damage: With respect to all operations performed under the contract, the Party shall carry general liability insurance having all major divisions of coverage including, but not limited to:

Premises - Operations

Products and Completed Operations

Personal Injury Liability

Contractual Liability

The policy shall be on an occurrence form and limits shall not be less than:

$1,000,000 Per Occurrence

$1,000,000 General Aggregate

$1,000,000 Products/Completed Operations Aggregate

$ 50,000 Fire/ Legal/Liability

Party shall name the State of Vermont and its officers and employees as additional insureds for liability arising out of this Agreement.

Automotive Liability: The Party shall carry automotive liability insurance covering all motor vehicles, including hired and non-owned coverage, used in connection with the Agreement. Limits of coverage shall not be less than: $1,000,000 combined single limit.

Party shall name the State of Vermont and its officers and employees as additional insureds for liability arising out of this Agreement.

8. **Reliance by the State on Representations:** All payments by the State under this Agreement will be made in reliance upon the accuracy of all prior representations by the Party, including but not limited to bills, invoices, progress reports and other proofs of work.

9. **Requirement to Have a Single Audit:** In the case that this Agreement is a Grant that is funded in whole or in part by federal funds, the Subrecipient will complete the Subrecipient Annual Report annually within 45 days after its fiscal year end, informing the State of Vermont whether or not a Single Audit is required for the prior fiscal year. If a Single Audit is required, the Subrecipient will submit a copy of the audit report to the granting Party within 9 months. If a single audit is not required, only the Subrecipient Annual Report is required.

   For fiscal years ending before December 25, 2015, a Single Audit is required if the subrecipient expends $500,000 or more in federal assistance during its fiscal year and must be conducted in accordance with OMB Circular A-133. For fiscal years ending on or after December 25, 2015, a Single Audit is required if the subrecipient expends $750,000 or more in federal assistance during its fiscal year and must be conducted in accordance with 2 CFR Chapter I, Chapter II, Part 200, Subpart F. The Subrecipient Annual Report is required to be submitted within 45 days, whether or not a Single Audit is required.

10. **Records Available for Audit:** The Party shall maintain all records pertaining to performance under this agreement. "Records" means any written or recorded information, regardless of physical form or characteristics, which is produced or acquired by the Party in

the performance of this agreement. Records produced or acquired in a machine readable electronic format shall be maintained in that format. The records described shall be made available at reasonable times during the period of the Agreement and for three years thereafter or for any period required by law for inspection by any authorized representatives of the State or Federal Government. If any litigation, claim, or audit is started before the expiration of the three year period, the records shall be retained until all litigation, claims or audit findings involving the records have been resolved.

11. **Fair Employment Practices and Americans with Disabilities Act**: Party agrees to comply with the requirement of Title 21V.S.A. Chapter 5, Subchapter 6, relating to fair employment practices, to the full extent applicable. Party shall also ensure, to the full extent required by the Americans with Disabilities Act of 1990, as amended, that qualified individuals with disabilities receive equitable access to the services, programs, and activities provided by the Party under this Agreement. Party further agrees to include this provision in all subcontracts.

12. **Set Off**: The State may set off any sums which the Party owes the State against any sums due the Party under this Agreement; provided, however, that any set off of amounts due the State of Vermont as taxes shall be in accordance with the procedures more specifically provided hereinafter.

13. **Taxes Due to the State**:

    a. Party understands and acknowledges responsibility, if applicable, for compliance with State tax laws, including income tax withholding for employees performing services within the State, payment of use tax on property used within the State, corporate and/or personal income tax on income earned within the State.

    b. Party certifies under the pains and penalties of perjury that, as of the date the Agreement is signed, the Party is in good standing with respect to, or in full compliance with, a plan to pay any and all taxes due the State of Vermont.

    c. Party understands that final payment under this Agreement may be withheld if the Commissioner of Taxes determines that the Party is not in good standing with respect to or in full compliance with a plan to pay any and all taxes due to the State of Vermont.

    d. Party also understands the State may set off taxes (and related penalties, interest and fees) due to the State of Vermont, but only if the Party has failed to make an appeal within the time allowed by law, or an appeal has been taken and finally determined and the Party has no further legal recourse to contest the amounts due.

14. **Child Support**: (Applicable if the Party is a natural person, not a corporation or partnership.) Party states that, as of the date the Agreement is signed, he/she:

    a. is not under any obligation to pay child support; or
    b. is under such an obligation and is in good standing with respect to that obligation; or
    c. has agreed to a payment plan with the Vermont Office of Child Support Services and is in full compliance with that plan.

    Party makes this statement with regard to support owed to any and all children residing in Vermont. In addition, if the Party is a resident of Vermont, Party makes this statement with regard to support owed to any and all children residing in any other state or territory of the United States.

15. **Sub-Agreements**: Party shall not assign, subcontract or subgrant the performance of this Agreement or any portion thereof to any other Party without the prior written approval of the State. Party also agrees to include in all subcontract or subgrant agreements a tax certification in accordance with paragraph 13 above.

16. **No Gifts or Gratuities**: Party shall not give title or possession of any thing of substantial value (including property, currency, travel and/or education programs) to any officer or employee of the State during the term of this Agreement.

17. **Copies**: All written reports prepared under this Agreement will be printed using both sides of the paper.

18. **Certification Regarding Debarment:** Party certifies under pains and penalties of perjury that, as of the date that this Agreement is signed, neither Party nor Party's principals (officers, directors, owners, or partners) are presently debarred, suspended, proposed for debarment, declared ineligible or excluded from participation in federal programs, or programs supported in whole or in part by federal funds.

    Party further certifies under pains and penalties of perjury that, as of the date that this Agreement is signed, Party is not presently debarred, suspended, nor named on the State's debarment list at: http://bgs.vermont.gov/purchasing/debarment

19. **Certification Regarding Use of State Funds:** In the case that Party is an employer and this Agreement is a State Funded Grant in excess of $1,001, Party certifies that none of these State funds will be used to interfere with or restrain the exercise of Party's employee's rights with respect to unionization.

20. **Internal Controls:** In the case that this Agreement is an award that is funded in whole or in part by Federal funds, in accordance with 2 CFR Part II, §200.303, the Party must establish and maintain effective internal control over the Federal award to provide reasonable assurance that the Party is managing the Federal award in compliance with Federal statutes, regulations, and the terms and conditions of the award. These internal controls should be in compliance with guidance in "Standards for Internal Control in the Federal Government" issued by the Comptroller General of the United States and the "Internal Control Integrated Framework", issued by the Committee of Sponsoring Organizations of the Treadway Commission (COSO).

21. **Mandatory Disclosures:** In the case that this Agreement is an award funded in whole or in part by Federal funds, in accordance with 2CFR Part II, §200.113, Party must disclose, in a timely manner, in writing to the State, all violations of Federal criminal law involving fraud, bribery, or gratuity violations potentially affecting the Federal award. Failure to make required disclosures may result in the imposition of sanctions which may include disallowance of costs incurred, withholding of payments, termination of the Agreement, suspension/debarment, etc.

22. **Conflict of Interest:** Party must disclose in writing any potential conflict of interest in accordance with Uniform Guidance §200.112, Bulletin 5 Section IX and Bulletin 3.5 Section IV.B.

(End of Standard Provisions)

SNOW PLOW BLADE CUTTING EDGES
DETAILED SPECIFICATIONS
VERMONT

General: It is the purpose and intent of these specifications to describe a high quality snow plow blade cutting edges. The blades will be constructed as shown in the enclosed diagrams. Blade sections will be identified by use of the part number being stamped on the end or stenciled on the face of the blade section. Shipments may be refused if blades are not labeled. The finished blade section will be given one coat of rust resistant lacquer. Blade sections will be bundled with like blades when shipped, do not mix blades in bundles. Shipping papers and invoices are to include the part number.

REGULAR STEEL SNOW PLOW BLADE CUTTING EDGES

1. **Blade:**

   A. The blade will be 5/8" thick unless otherwise specified AISI C1090 quality steel.
   B. Punched or drilled square bolt holes will be 11/16" diameter. The location and spacing of the holes will be as designated on the diagrams provided.
   C. The center of the holes shall be in line within 1/32" of the established center line.

HARDENED SNOW PLOW BLADE CUTTING EDGES

1. **Blade:**

   A. The blade will be 1" thick AISI 1074 quality steel.
   B. Punched or drilled square bolt holes will be 11/16" diameter. The location and spacing of the holes will be as designated on the diagrams provided.
   C. The center of the holes shall be in line within 1/32" of the established centerline.

2. **Hardness:**

   A. Blades will be selectively hardened front and back a primary and secondary hardness.
   B. The hardening pattern will start 5/8" +/- 1/8" above the bottom edge of the blade with a 3 1/2" width over the length of the blade.
   C. Primary hardness, Rockwell C 62 +/- 5, for a depth of 1/8" +/- 1/32" at the high point of the pattern.
   D. Secondary hardness, Rockwell C 50 +/- 5, for a minimum depth of 1/32" at the high point of the pattern.

TUNGSTEN CARBIDE TIPPED SNOW PLOW BLADE CUTTING EDGES

Tungsten Carbide Tipped: A "Type A" certification will be provided on the carbide insert by the manufacturer to include:

Percent Cobalt
Density in GMSLCC
Hardness (Rockwell A)
Transverse Rupture Strength in PSI Statement certifying that no reclaimed or scrap tungsten carbide has been used.

1. **Blade:**

A. The blade will be ¾" thick flat hot rolled finished SAE 1020 steel.

B. Punching will be 11/16" square holes countersunk for 5/8" diameter
Plow bolts. The location and spacing of the holes will be as designated on the diagrams provided.

C. The center of the holes shall be in line within 1/32" of the established centerline.

D. The groove for the carbide inserts will be milled in the center of the blade edge.

E. The highest and lowest tip points are not to exceed 1/32" in a multiple blade set.

F. Blades will be free of warp age

G. Longitudinal deviation will not exceed 1/8" on a 6' section.

2. **Tungsten Carbide Inserts:**

A. The inserts will be high shock WC grade virgin tungsten carbide with a cobalt content not less than 11.5% or more than 12.5%.
Hardness: 87.5 minimum to 88.5 maximum, Rc. "A" Scale.
Density: 14.1 minimum to 14.6 maximum GMSLCC.
Transverse Rupture Strength: 350,000 P.S.I. minimum.

B. The inserts will be a trapezoid design conforming to the following dimensions.
Height: .635: +/- .005
Width: .365 +/- 1-
Length: 1" Nominal
Bottom Angle: 25 degrees with a nose radius of 1/16" minimum.

3. **Brazing:**

A. Brazing material will be a high strength silver alloy type. Braze shear strength to be 30,000 P.S.I. minimum.

B. Tungsten carbide inserts will be positioned in the milled groove with .010" between inserts for the entire length of each blade section.

C. The inserts will be brazed on all sides using sound brazing practices. There will be no voids or use of shims.

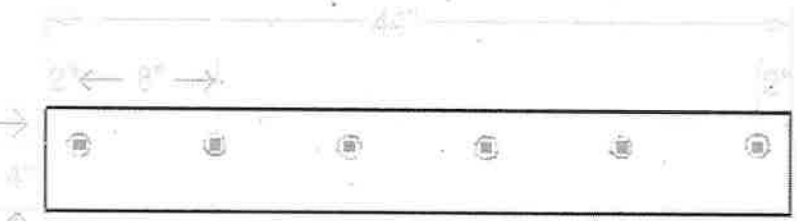

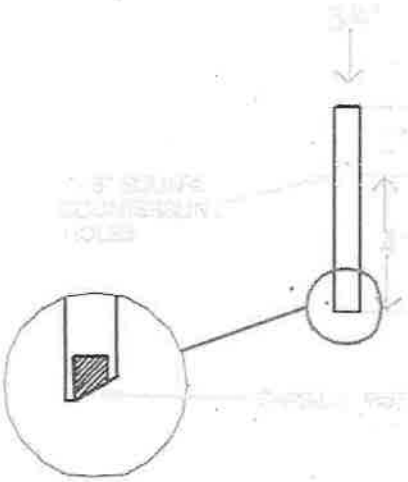

BLADE: CARBIDE STEEL SET
TYPE: PLOW 44" – 6" TP
NUMBER: 48-970-003
DATE: 400

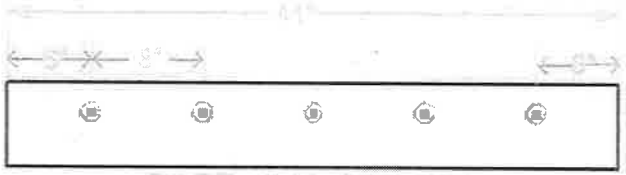

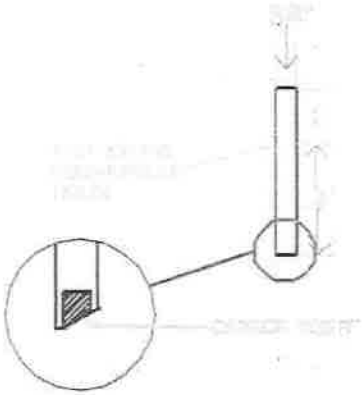

BLADE: CARBIDE STEEL SET
TYPE: PLOW 44" – 6" TP
NUMBER: 48-970-004
DATE: 4/00

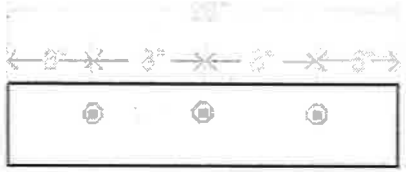

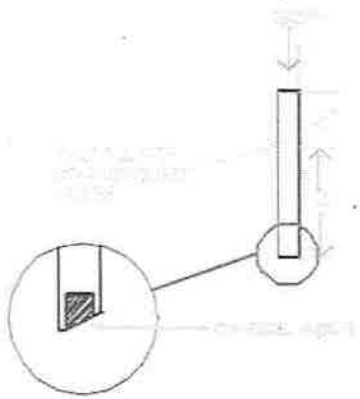

BLADE: CARBIDE STEEL SET
TYPE: PLOW 28" – 6" TP
NUMBER: 48-970-005
DATE: 400

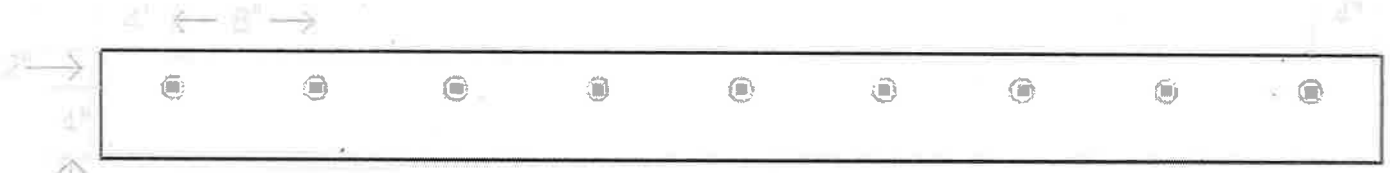

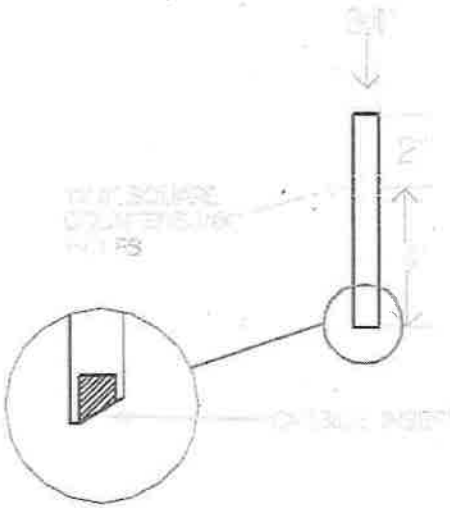

BLADE: CARBIDE STEEL SET
TYPE: PLOW 72" – 6" TP
NUMBER: 48-970-008
DATE: 6/04

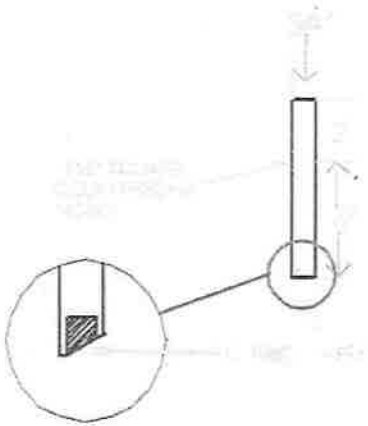

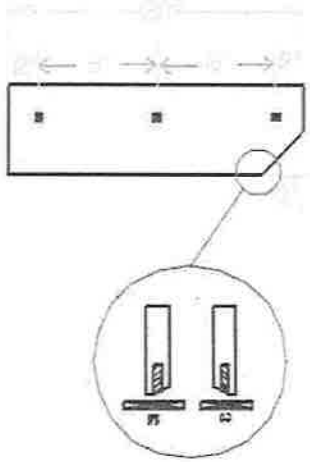

NOTE: Orders will be right-hand (R) or left-hand (L) to designate the direction of the taper on the leading edge

BLADE: CARBIDE STEEL
TYPE: WING END SECTION
NUMBER: 48-970-013
DATE: 400

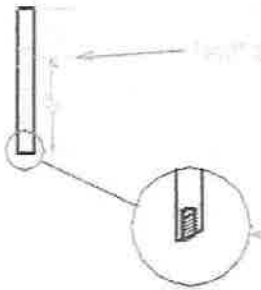

BLADE: CARBIDE STEEL
TYPE: GRADER 121 MOLDBOARD
NUMBER: 48-870-011
DATE: 3/02

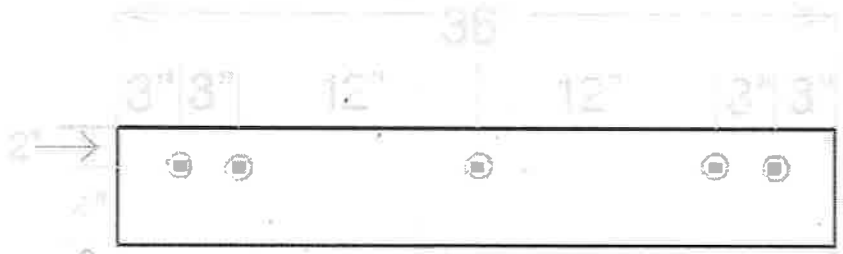

PART #48-970-020
5 HOLES

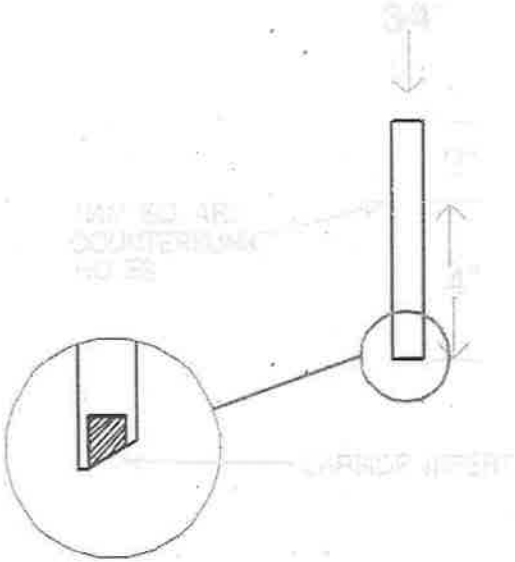

BLADE: CARBIDE STEEL
TYPE: PLOW 36"–6" TP
NUMBER; 48–970–020
DATE: 6/04

ATTACHMENT D
10 of 102

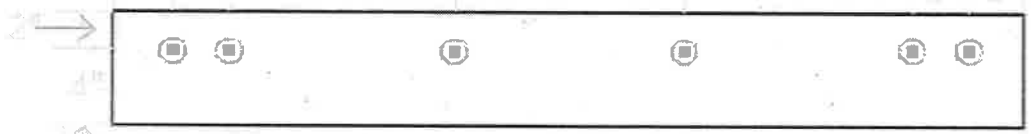

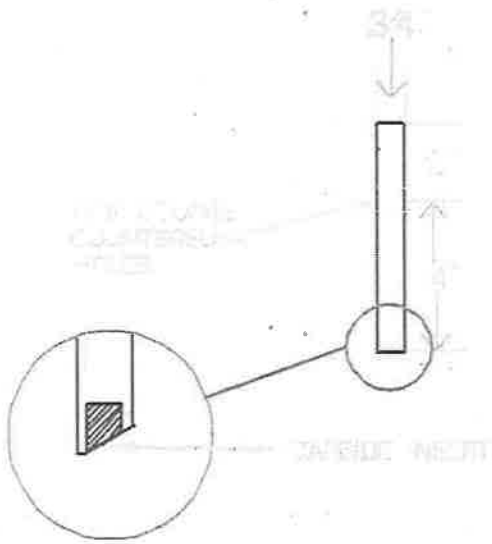

BLADE: CARBIDE STEEL
TYPE: PLOW 48"–6" TP
NUMBER: 48–970–021
DATE: 6/04

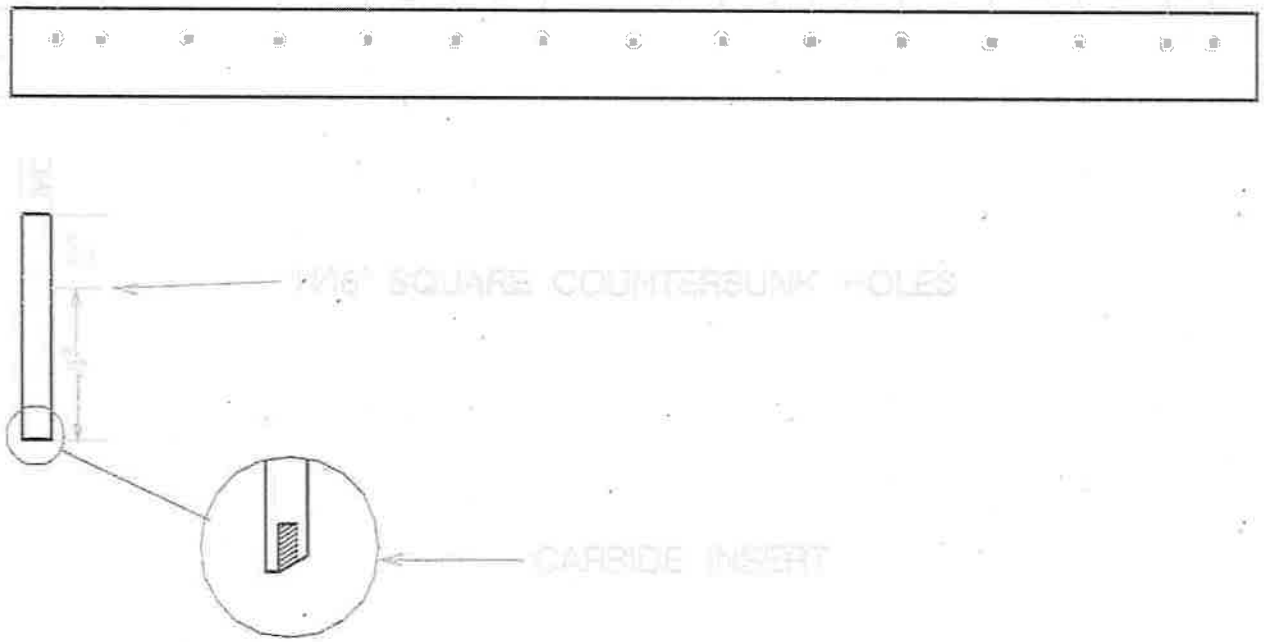

BLADE: CARBIDE STEEL
TYPE: JOHN DEERE MOLDBOARD
NUMBER: 48-970-030
DATE: 6/04

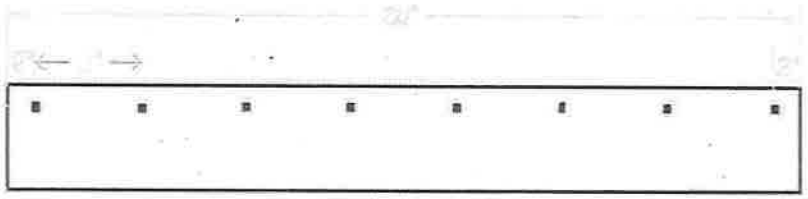

BLADE: HARDENED STEEL SET
TYPE: PLOW 60" – 8" TP
NUMBER: 48-960-002
DATE: 600

BLADE: HARDENED STEEL SET
TYPE: PLOW 72" – 8" TP
NUMBER: 48-960-003
DATE: 6/00

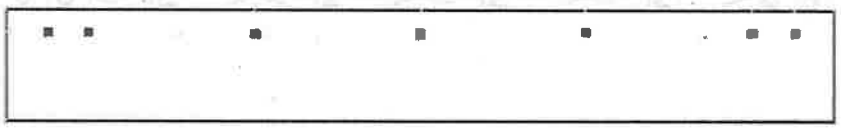

BLADE: HARDENED STEEL SET
TYPE: PLOW 60" – 8" TP
NUMBER: 48-960-010
DATE: 6-04

BLADE: HARDENED STEEL SET
TYPE: PLOW 72" – 8" TP
NUMBER: 48-960-011
DATE: 604

BLADE: HARDENED STEEL
TYPE: JD MOLDBOARD 8" TP
NUMBER: 48-960-030
DATE: 604

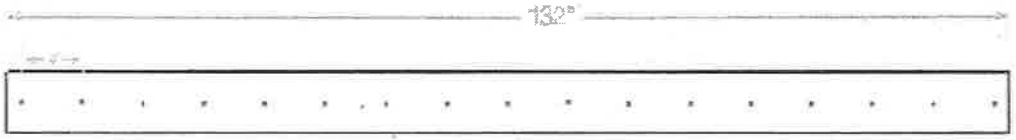

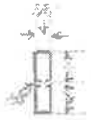

BLADE: REGULAR STEEL
TYPE: P110W 11-8" CP
NUMBER: 48-610-001
DATE: 4/00

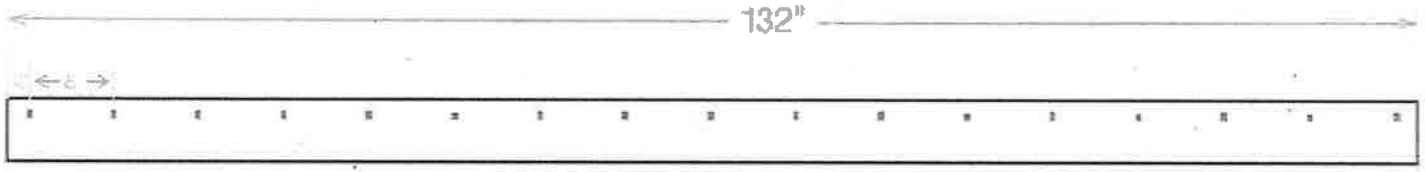

17 SQUARE HOLES 8" C/C

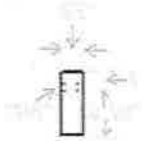

BLADE: REGULAR STEEL
TYPE: PLOW 11'-6" TP
NUMBER: 48-910-002
DATE: 400

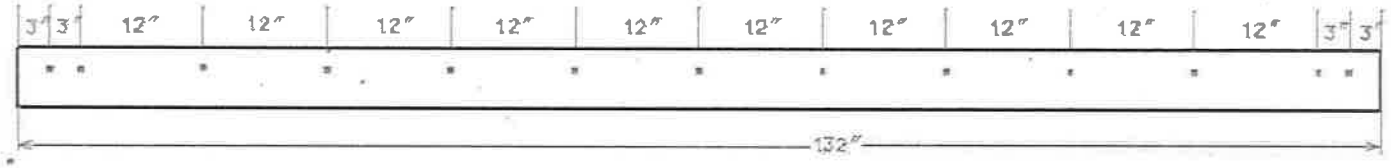

13 SQUARE HOLES 12" C/C

BLADE: REGULAR STEEL
TYPE: PLOW 11'-6"
NUMBER: 48-910-020
DATE: 6/04

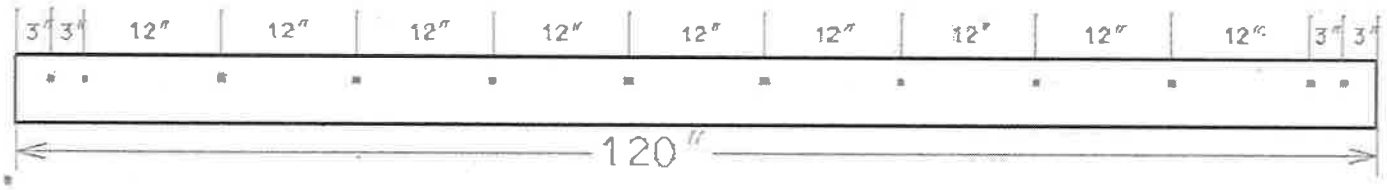

12 SQUARE HOLES 12" C/C

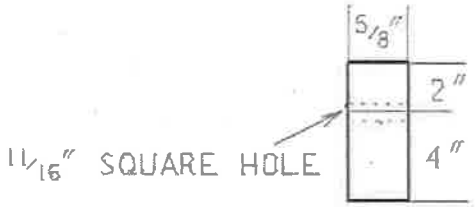

BLADE: REGULAR STEEL
TYPE: PLOW 10'-6" TP
NUMBER: 48-910-021
DATE: 6/04

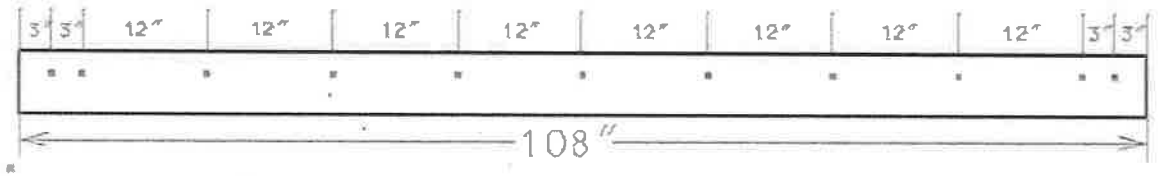

11 SQUARE HOLES 12" C/C

BLADE: REGULAR STEEL
TYPE: PLOW 9'-6"
NUMBER: 48-910-022
DATE: 6/04

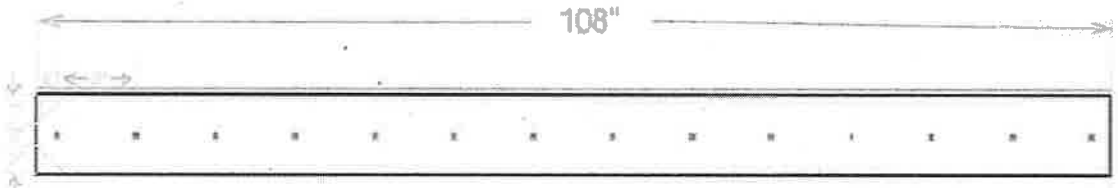

BLADE: REGULAR STEEL
TYPE: WING 9' – 8" CP
NUMBER: 48-920-002
DATE: 3/02

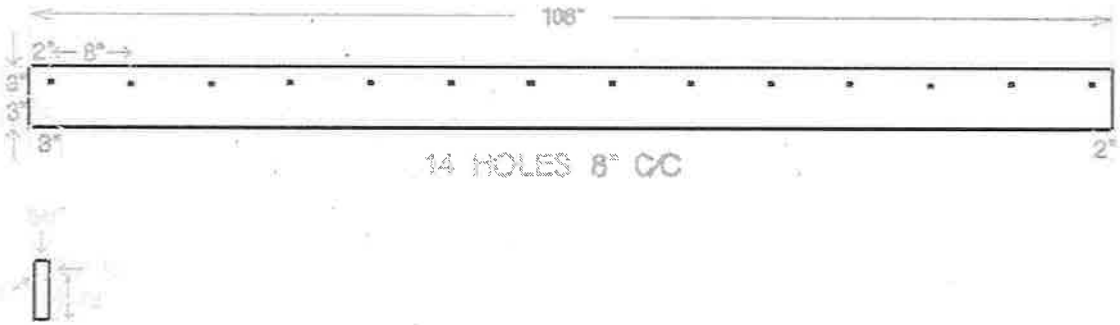

BLADE: REGULAR STEEL
TYPE: WING 9'– 6" TP
NUMBER: 48-920-009
DATE: 400

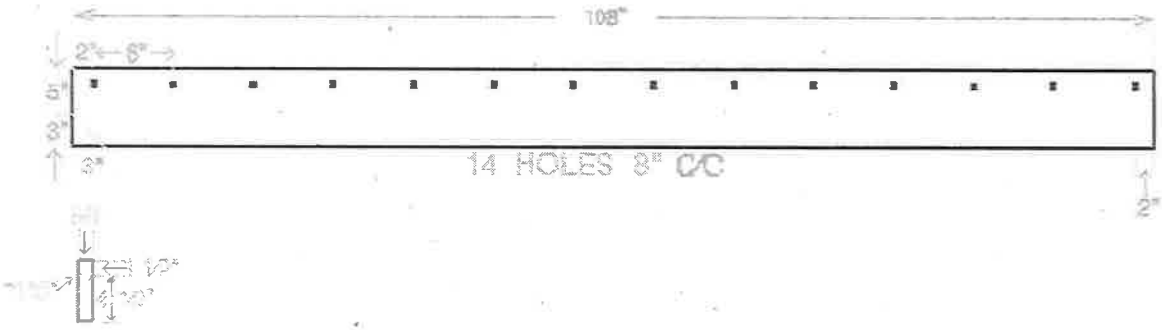

BLADE: REGULAR STEEL
TYPE: WING 9' – 8" TP
NUMBER: 48-920-004
DATE: 4/00

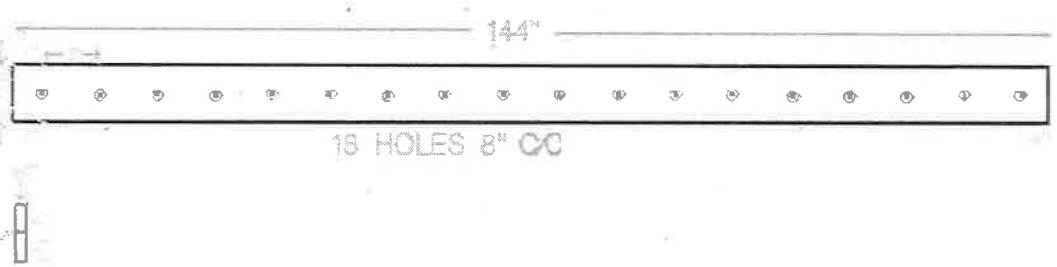

BLADE: REGULAR STEEL
TYPE: GRADER WING 12'– 8" CP
NUMBER: 49-990-005
DATE: 302

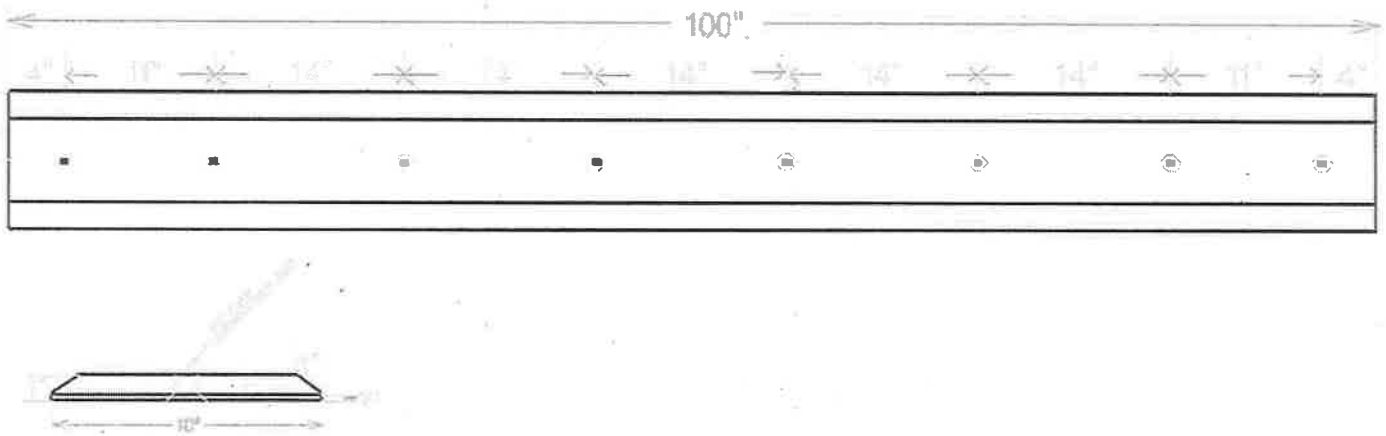

BLADE: REGULAR STEEL
TYPE: LOADER JD 544E
NUMBER: 48-940-001
DATE: 3/02

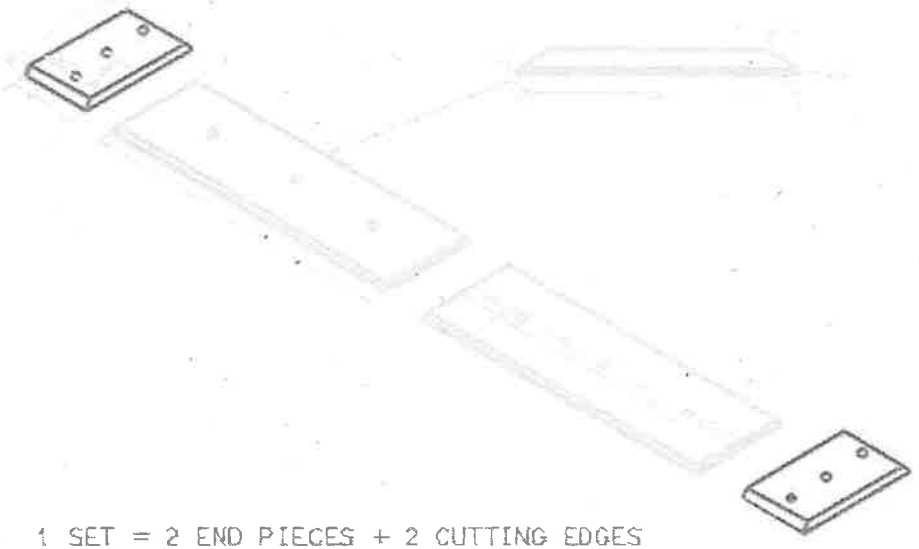

NOTE: 1 SET = 2 END PIECES + 2 CUTTING EDGES

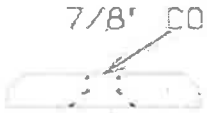

BLADE: REGULAR STEEL
TYPE: LOADER 544G
NUMBER: 48-940-002
DATE: 600

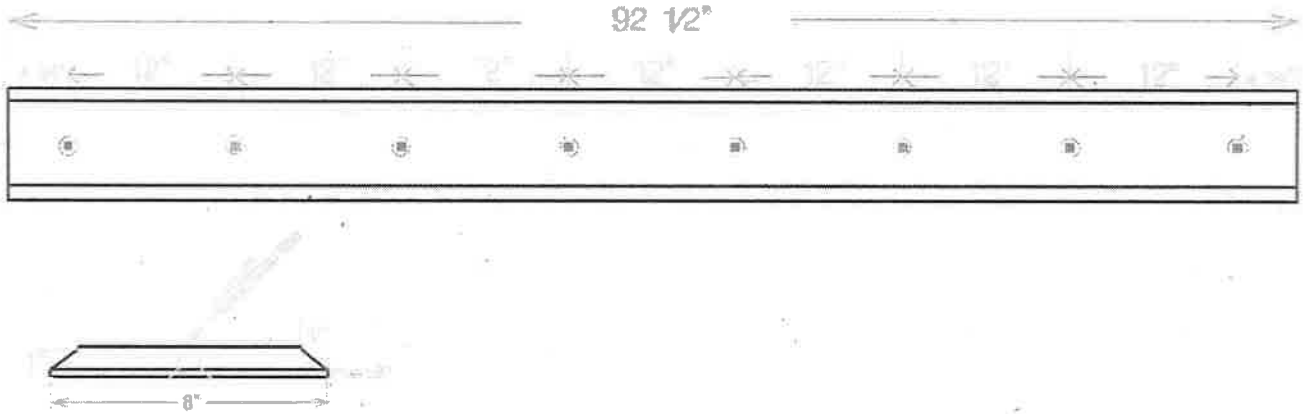

BLADE: REGULAR STEEL
TYPE: JD 310/410
NUMBER: 48-940-003
DATE: 3/02

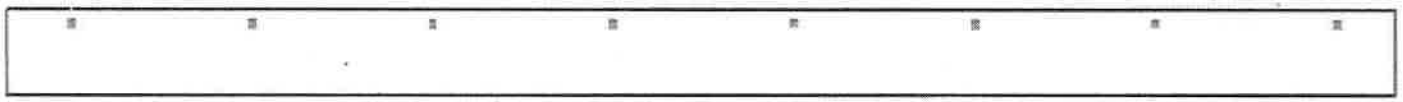

8 SQUARE HOLES 12 1/2" C/C

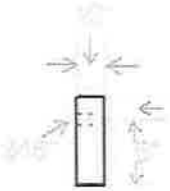

BLADE: REGULAR STEEL
TYPE: PLOW 8' FISHER
NUMBER: 48-940-021
DATE: 604

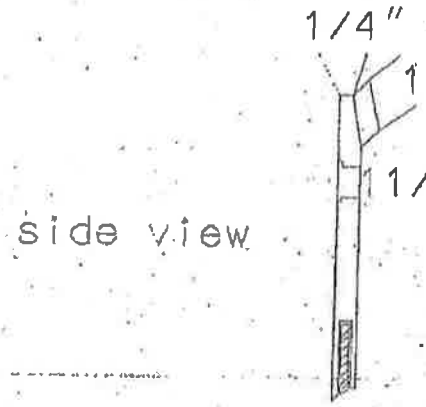

side view

Trapezoid insert
365 x ~~305~~ 635 x 1"

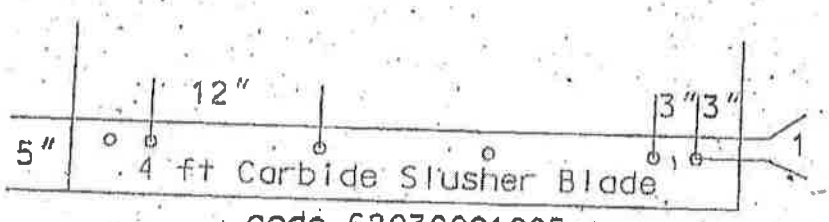

code 62030001005
11/16" square holes

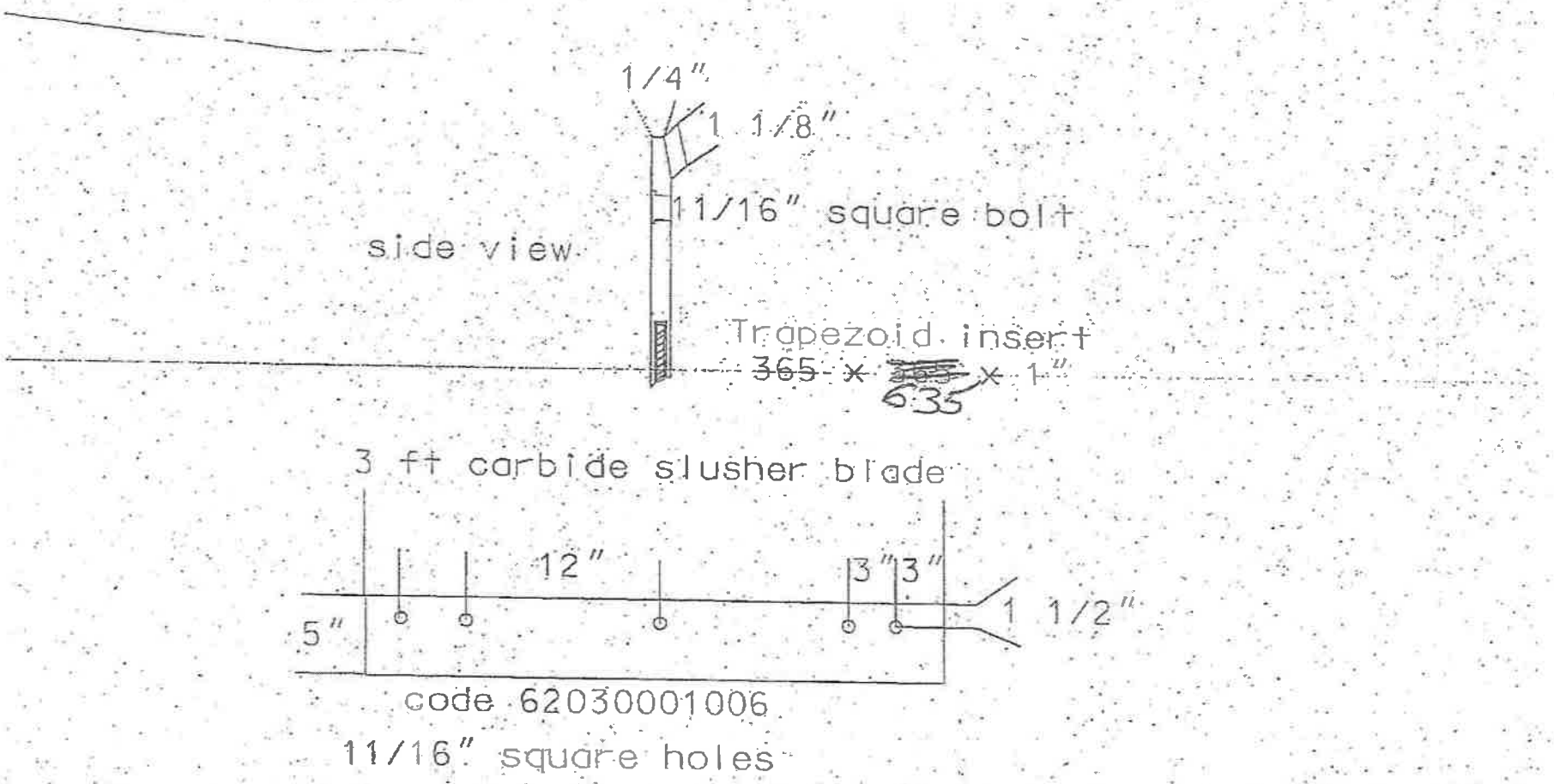

ATTACHMENT D
32 of 102

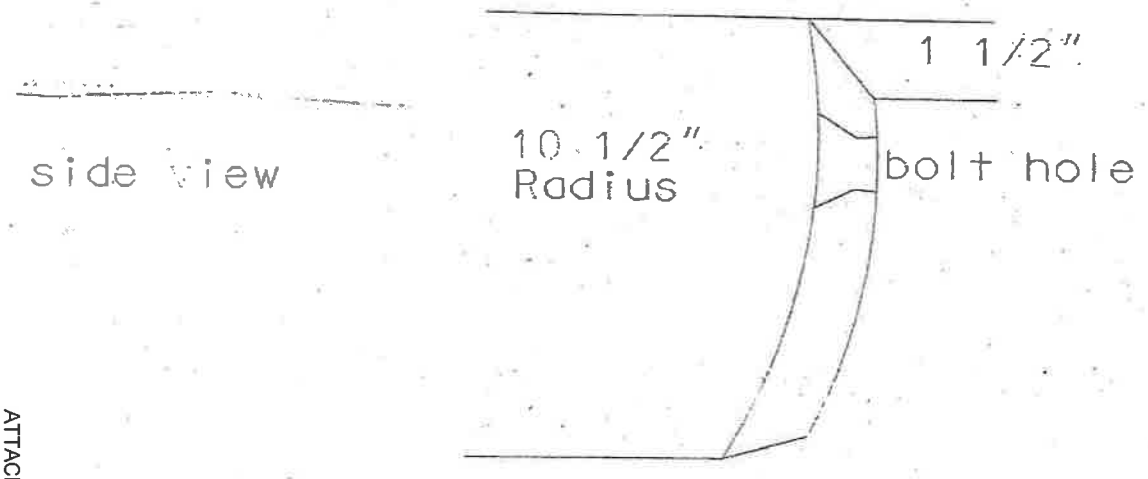

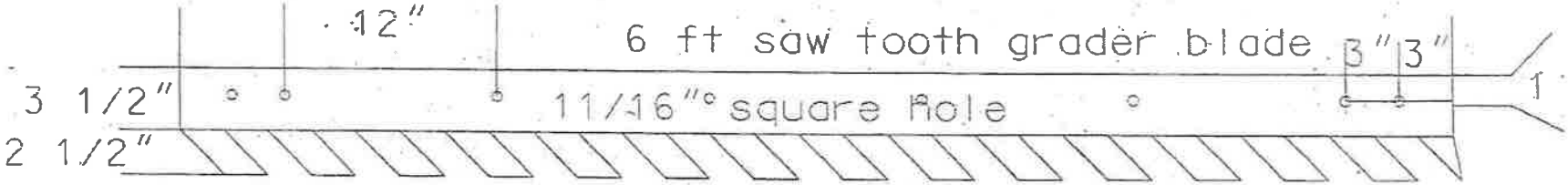

Code 62030001014

ATTACHMENT D
33 of 102

115.AP 13 FOOT WING BLADE

Bid item #10

62030001071.

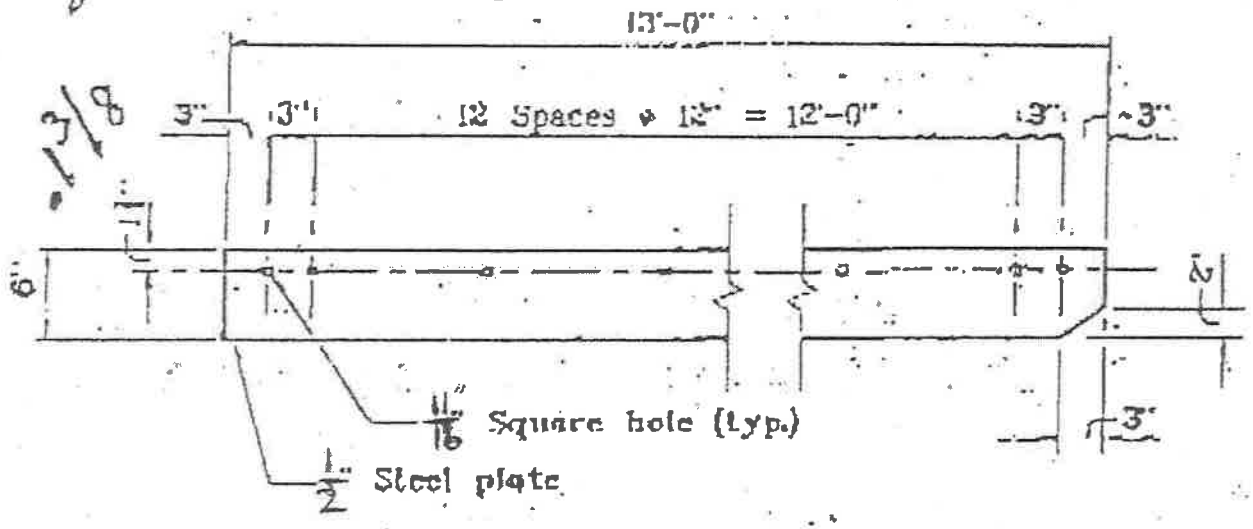

SNOW PLOW BLADE CUTTING EDGES
DETAILED SPECIFICATIONS
IDAHO

TUNGSTEN CARBIDE TIPPED

I. MATERIAL SPECIFICATIONS

A. BLADES

1. The blade shall be ¾" (three-quarters of an inch) thick flat, hot-rolled finished steel SAE 1020, or ASTM A36 Structural Grade hot rolled flat bar.
2. Punching shall be 11/16" square holes countersunk to receive 5/8" diameter No. 3 plow bolts.
3. Location and spacing of the holes shall be as shown on the attached drawing, specifically "SNOW PLOW CUTTING EDGE."
4. The groove of the carbide inserts shall be milled in the center of the blade edge.
5. Center of holes shall be in line within 1/32" of established centerline.
6. Lengths of finished blade assemblies shall be 3' and 4' – See Bid Schedule for requested quantities of both lengths.

B. TUNGSTEN CARBIDE INSERTS

1. The inserts shall be high shock WC grade virgin tungsten carbide with a cobalt content not less than 11% or more than 12.5%.

   Density: 14.1 Minimum to 14.6 Maximum GMSLCC
   Hardness: 87.5 Minimum to 89.0 Maximum Rc. "A" Scale
   Transverse Rupture Strength: Minimum 300,000 PSI

   "The carbide insert manufacturer and/or bidder shall furnish certification WITH HIS BID SUBMITTAL that the inserts meet the specifications as outlined in this document. Failure to supply such certification with bid submittal will result in the bid being declared non-responsive."

2. Inserts shall be a trapezoid design of the following dimensions:
   Height: .635" +/- 0.005" (long angle)
   Width: .365" +/- 0.010"
   Length: 1" nominal
   Bottom Angle: 25 degrees with a nose radius of 1/16" minimum

C. BRAZING AND ASSEMBLY

1. The brazing material shall be high strength alloy type.
2. The braze shear strength shall be minimum 30,000 PSI.

3. The tungsten carbide inserts shall be positioned in the milled groove at .010 between the inserts the entire length of each cutting edge section.
4. The inserts shall be brazed on all sides consistent with sound brazing practice with no evidence of voids, use of shims, or fillers.
5. Each blade section to contain one insert one inch nominal length for each inch of blade section length.
6. The complete cutting edge shall consist of a combination of three sections with the two end sections interchangeable.
7. The difference between the highest and lowest tip point not to exceed 1/32" on any given blade assembly.
8. The finished blade sections shall be free of warpage and longitudinal deviation not to exceed 1/8" in a four-foot blade section.
9. Each blade section shall be identified with manufacturer's identification label, stamp or stencil on each end of the section.
10. The finished blade sections shall have markings showing the front edge of the blade to avoid improper mounting.
11. The finished blade section shall be given one coat of rust resistant lacquer.

II. CERTIFICATION

Each blade shipment must be accompanied with certification documentation, specifically:

1. A Certificate of Conformance listing or stating
   a. Manufacturer Work/Job Order Number
   b. Raw Material lot numbers used in production
   c. Manufacturing date
   d. Manufacturer Quality Inspection Manager with contact information
   e. Conformance to bid specifications

2. Raw Material Certificates of Analysis (aka, "mill" certs)
   a. Steel
   b. Tungsten Carbide

III. DELIVERY AFTER RECEIPT OF ORDER (ARO)

All orders must be received by the ordering District(s) within 90 calendar days after order placement. Each District is responsible for placing orders using a Purchase Order.

IV. DELIVERY REQUIREMENTS

It shall be the responsibility of the successful bidder to deliver to an area designated by the District Supply Operations Supervisor(s). A forklift with operator will be provided by the District to assist in unloading.

Blades sections will be bundled with like blades when shipped; do not mix blades in bundles. The blades must be packaged or banded in a manner so that they may be unloaded by a forklift.

Deliveries are to be made between the hours of 8:30 AM to 11:30 AM and 1:00 PM to 4:00 PM Local Time, on weekdays only. No deliveries will be accepted after these hours. No deliveries will be accepted on Saturdays, Sundays and Holidays.

The successful vendor is to notify the customer at the delivery location of any shipment at least 24 hours prior to delivery.

SNOW PLOW BLADE CUTTING EDGES
DETAILED SPECIFICATIONS
MASSACHUSSETTS

The following general requirements shall apply to all plow blades, both carbon steel and tungsten carbine edge, to be supplied under the Contract governed by this specification.

Shearing:
Shearing is to be within 1/16" of actual dimensions as shown on blueprints, to be clean cut with no burrs. **Flame cuts will not be accepted.**

Blade Sizes:
The length and width of all blades shall be as shown on the accompanying drawings with a maximum tolerance of + or - 1/16".

Punching:
Punching shall be square holes to receive plow bolts. Plow bolts shall not be supplied. Sizes, location and spacing of the holes shall be shown on the attached drawings. Maximum horizontal and vertical tolerance on placement of the centerlines of the punched holes shall be + or - 1/16". HOLES MUST BE SQUARE. ROUND HOLES ARE UNACCEPTABLE.

Painting:
Plow blade shall be painted with a black rust-inhibiting paint on both sides to prevent rusting while being stored.

Bundle Size:
Blade edges are to be bundled in lots of ten (10) each of the same type and **bundles are to be strapped together using a 1" strap at three locations.**

Chemical Analysis:
The manufacturer shall take a test ingot during the pouring of each melt of steel used in the manufacture of plow blade cutting edges supplied under this specification. The chemical composition shall be reported to the Department for each delivery of cutting edges and for each melt represented in the shipments means of a Certified Mill Test Report of each heat of steel used. The chemical composition shall conform to the requirements set forth in the paragraph Chemical Composition below. Any shipment not accompanied by a certified chemical analysis shall be rejected and returned at the Contractor's expense. The Contractor shall replace any blades returned with certified blades within fifteen (15) business days of notification.

Chemical Composition:

Carbon Steel Cutting Edges:
The blades shall be made from flat hot-rolled open hearth carbon steel conforming to S.E.A. C-1090 of latest issue and shall have a Brinell hardness of 275 min. and 325. Max. and shall conform to the following analysis of chemical composition.

	PERCENTAGE	
• **Element**	• **Min.**	**Max.**
• Carbon	• 0.85	• 1.00
• Manganese	• 0.60	• 0.90
• Phosphorous	•	• 0.04
• Sulphur	•	• 0.05
• Silicon	•	• 0.30

Tungsten Carbide Tipped Plow Blade Cutting Blade:

Plow Blade
The blades shall be made from flat hot-rolled finished steel conforming to S.A.E. 1021 of latest issue and shall conform to the following analysis of chemical composition:

	Percentage	
Element	**Min.**	**Max.**
Carbon	0.18	0.23
Manganese	0.60	0.90
Phosphorous		0.04
Silicon		0.05

Tungsten Carbide Inserts:
The inserts shall be fabricated of high stock WC grade tungsten Carbide having cobalt content between 10% and 12%.

	Min.	**Max.**
Specific Gravity	14:1 min	14.6 max
Hardness:	87.5 min	87.5 min Rockwell "a" Scale
Transverse Rupture Strength	350,000 psi. Min	

The carbide insert manufacture shall furnish with each shipment certification to the purchaser that the inserts conform to the requirements set forth above and Do Not Contain Any Reclaimed Hard scrap Tungsten Carbide. Any shipment delivered without the required certification shall be returned to the Contractor at his expense. The Contractor shall replace all rejected blades with certified blades.

The Contractor shall replace any blades returned within fifteen (15) business days of notification.

The following list of plow blades is to be included on this contract:

Line Item	Size and Description
00010	Viking Plow ½" x 6" x 132"
00020	Snow King Plow ¾" x 6 x 108"
00030	3 ft carbide blade
00040	4 ft carbide blade
00050	41 ½" x 10" blade (J.D. cutting edge for 544GH loader John Deere DWG # T146673)
00060	14" x 8 1/8" blade (J.D. cutting edge for 544GH loader John Deere DWG # T146672)
00070	Steel plate ½" x 8" x 6"
00080	**Viking Plow 1/2" x 6" x 120"**
00090	**Snow King Plow 3/4" x 6" x 96"**
00100	**Fisher Plow 5/8" x 8" x 96"**
00110	**John Deere Bucket weld on cutting Edge 1" x 8" x 100"**

LINE ITEM # 00010

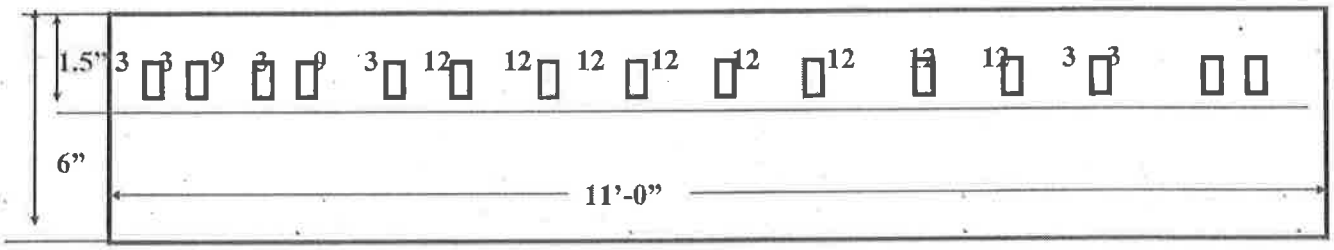

SIZE: 1/2" X 6" X 132"
All holes to be punched 15 holes 11/ 16" sq. Spaced as shown above.
Plow Blade 1/2" thick
From left to right first two (2) are 3" apart on center, then 9" on center, then 3" on center, then 9" on center, then 3" on center, then the next 7 holes are 12" on center, then 3" on center, then 3" on center

For the Viking plows

Line Item # 00020

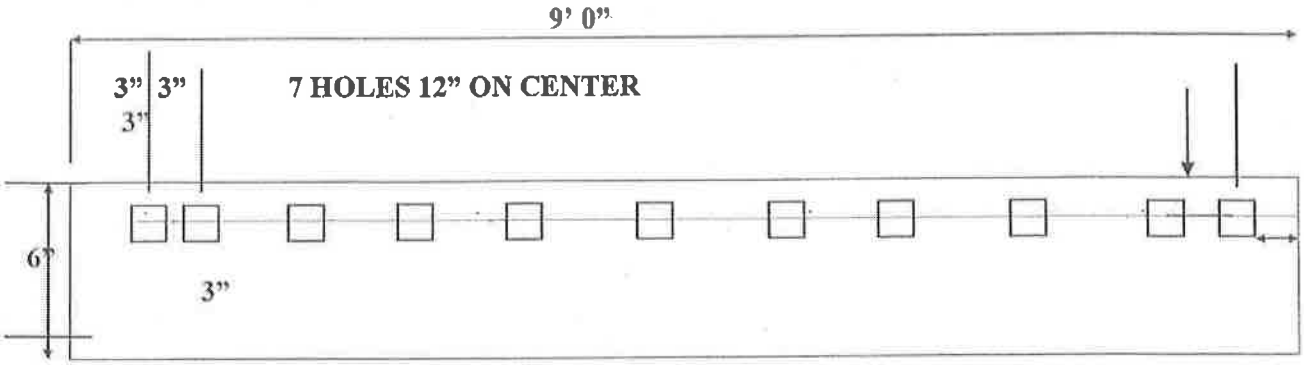

SIZE: 3/4" X 6" X 108"
All holes to be punched 11 holes 11/ 16" sq. Spaced as shown above.
Plow Blade 3/4" thick
From left to right first two (2) are 3" apart on center, and then the next 7 holes are 12" on center, then 3" on center, then 3" on center
For the Snow-King Plows

Line Item # 00030
Three (3) Foot Tungsten Carbide Edge Plow Blades
Size: 36" x 6" x 3/4"

Line Item # 00040
Four (4) Foot Tungsten Carbide Edge Plow Blade
Size : 48" x 6" x 3/4"

All Holes To Be Punched
5 Holes 11/16" sq. Spaced as Shown Above
Plow Blades 3/4" Thick

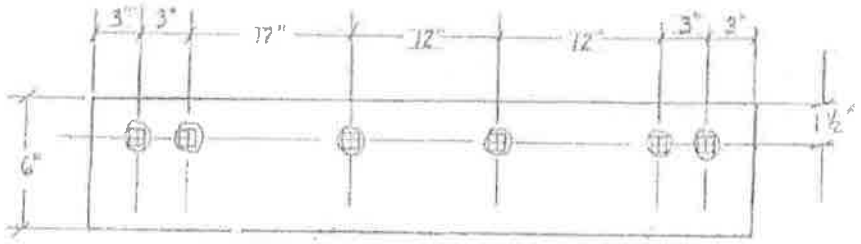

48" CARBIDE SECTION

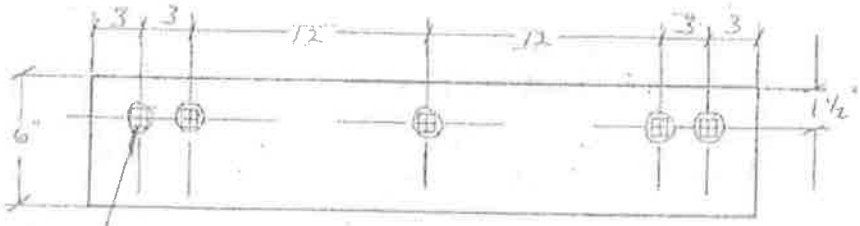

36" CARBIDE SECTION

11/16" SQ. HOLES PUNCHED FOR 5/8" PLOW BOLTS
COUNTERSUNK

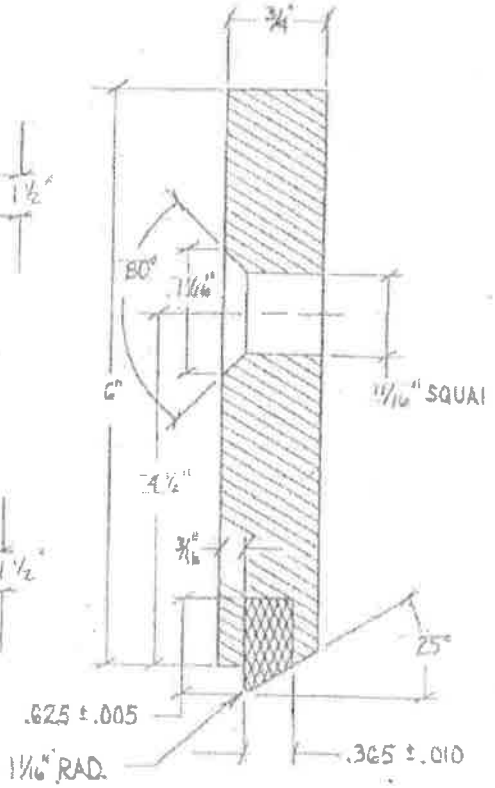

Line Item # 00050
John Deere Cutting Edge for 544GH loader
John Deere DWG # T146673
Size; 1" x 10" x 41.5" Blade
Double Bevel Flat
Bolt Size = 3/4" x 2 3/4"

Top View

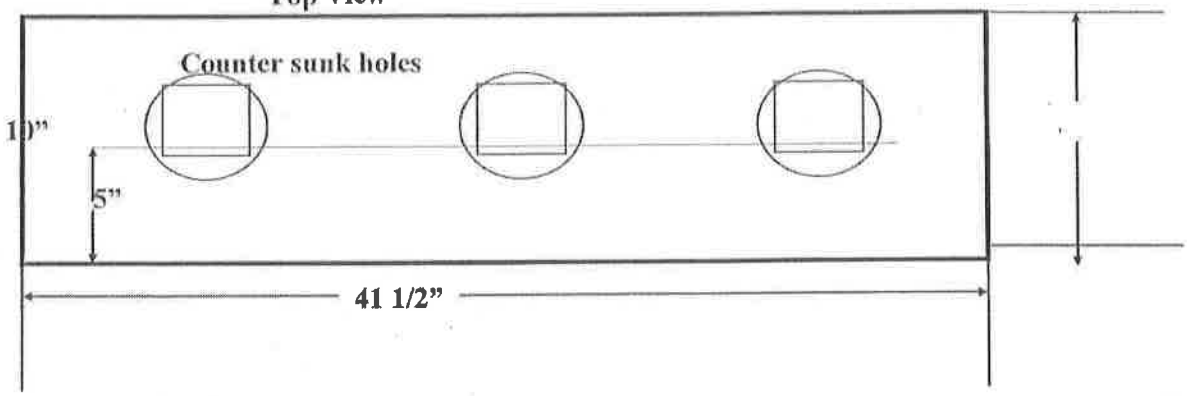

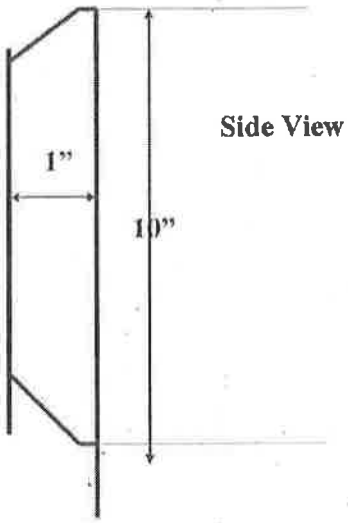

Side View

Line Item # 00060
John Deere Cutting Edge for 544GH loader
John Deere DWG # T146672

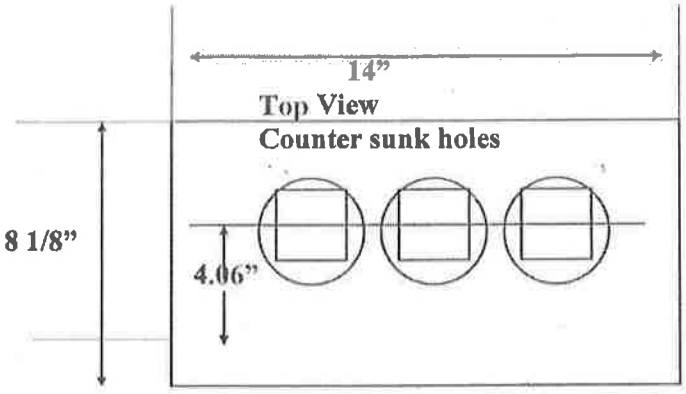

Size; 1" x 14" x 8 1/8" Blade
Double Bevel Flat
Bolt Size = 3/4" x 2 3/4"

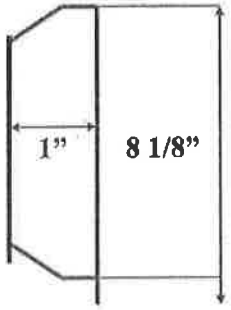

Side View

Line Item # 00070

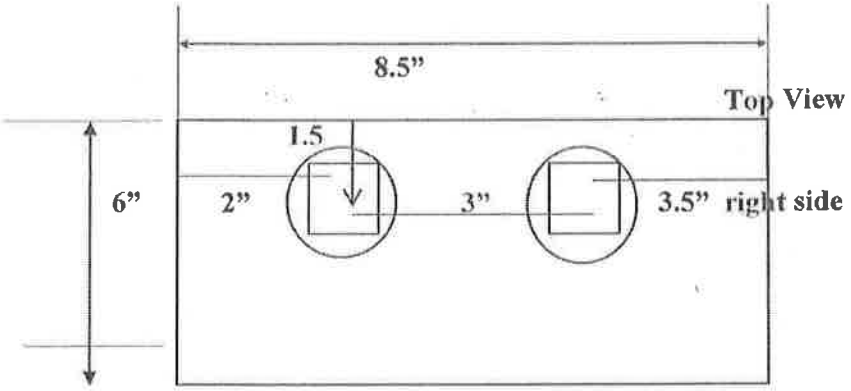

Counter sunk holes
Holes are 1 ½" FROM TOP
Size; 5/8"x 6" x 8.5" Blade
Steel Plate to make curb shoes

Line Item # 00080

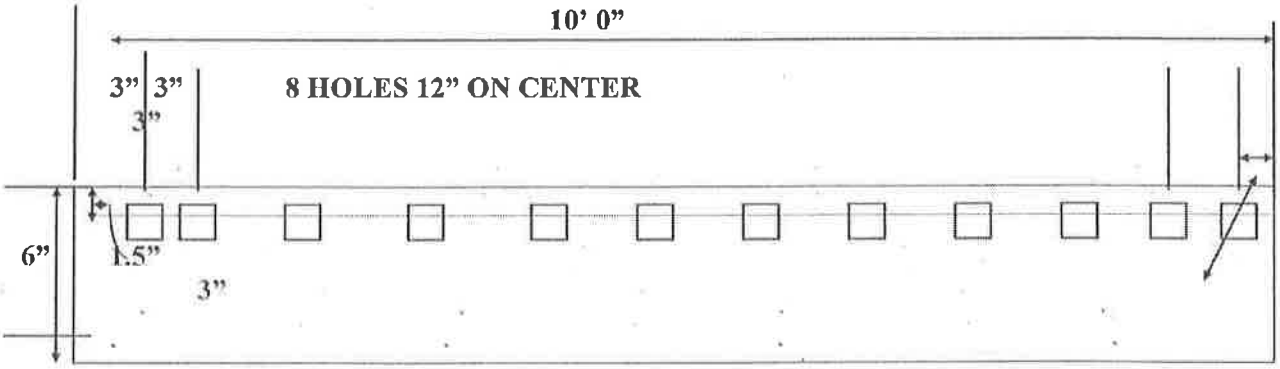

SIZE: 1/2" X 6" X 120"
All holes to be punched 12 holes 11/ 16" sq. Spaced as shown above.
Plow Blade 1/2" thick
From left to right first two (2) are 3" apart on center, and then the next 8 holes are 12" on center, then 3" on center, then 3" on center

For the Viking Plows

Line Item # 00090

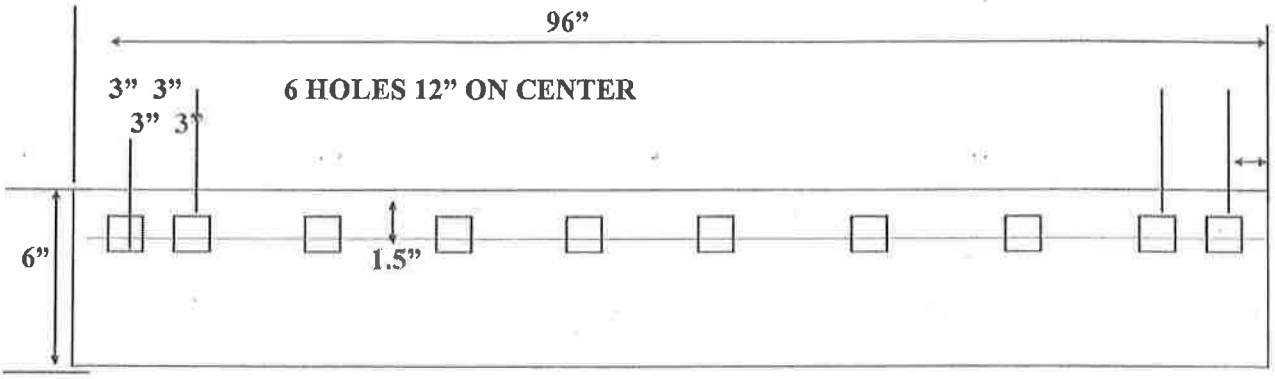

SIZE: 3/4" X 6" X 96"
All holes to be punched 10 holes 11/ 16" sq. Spaced as shown above.
Plow Blade 3/4" thick
From left to right first two (2) are 3" apart on center, and then the next 6 holes are 12" on center, then 3" on center, then 3" on center

For the Snow King Plows

Item # 00100

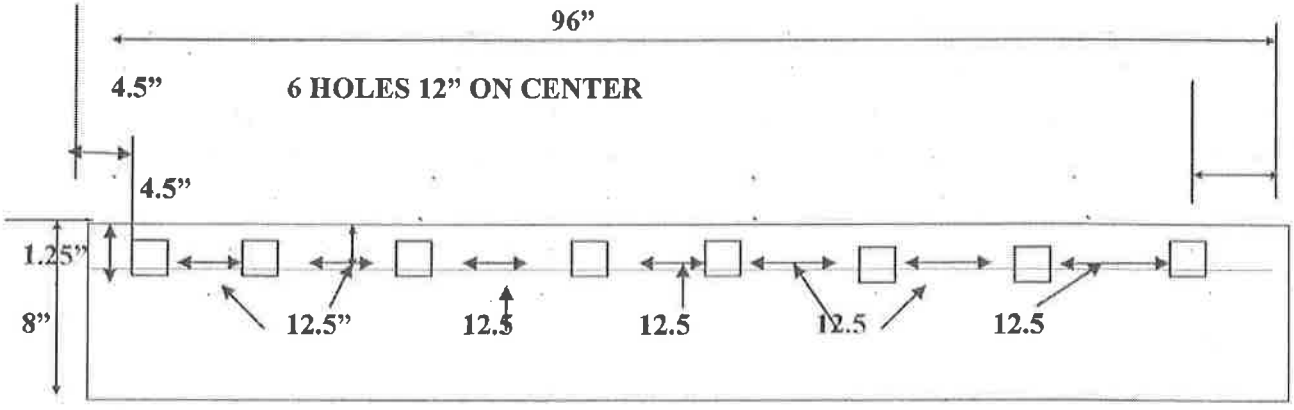

SIZE: 5/8" X 8" X 96"
All holes to be punched 6 holes 11/ 16" sq. Spaced as shown above.
Plow Blade 5/8" thick
From left to right first hole is 4.5" apart on center, and then the next 6 holes are 12.5" on center, then the last hole is 4.5" on center from the right side end

For the Fisher Plows

Item # 00110

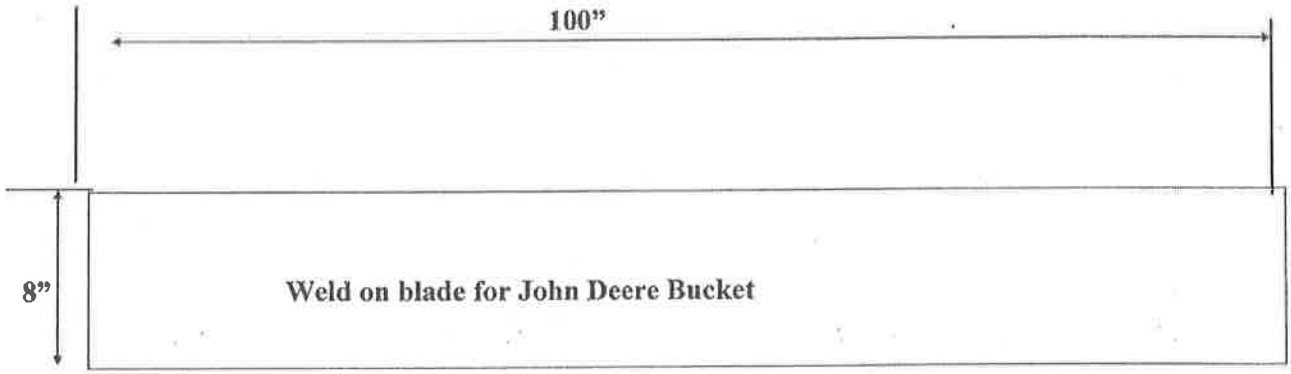

SIZE: 1" X 8" X 100"

KÜPER

Kueper Plow Blade Specification:

TUCA SX Carbide Tipped Snowplow Blades

Presented by Kueper North America, LLC

2012

KÜPER®

About this Specification

© 2012 Kueper North America, LLC. All Rights Reserved. All other brands and names may be trademarks of their respective owners and are used for explanation without intent to infringe.

KÜPER®

1. Description:

This specification covers snowplow blades with tungsten carbide inserts free floating in vulcanized rubber with the configuration of –STEEL-RUBBER-STEEL WITH CARBIDE INSERTS–RUBBER - STEEL.

2. Materials:

Front Steel Plate:

Wear resistant steel with an average hardness of 400 HB,

1. matching the wear and hardness specifications of Dillidur 400 V.
   - **Front Steel Plate thickness: 8 mm**
   - **Hardness: 400 HB (43 Rockwell C, 114 Rockwell B)**
   - **Tensile Strength: U.T.S. = 1300 MPa**
   - **Yield Point: Y.P. = 1000 MPa**
   - **Tolerances according to specifications of Dillidur 400V.**
   - **Shape: Front plate to be formed in a "wave" shape in order to better deflect snow into the mold-board of the plow. Front plate to have triangular openings as wear indicator and to permit snow to cool the carbide.**

Back Steel Plate:

Wear resistant steel with an average hardness of 400 HB

2. matching the specifications of Dillidur 400 V.
   - **Back Steel Plate thickness: 8 mm**
   - **Hardness: 400 HB (43 Rockwell C, 114 Rockwell B) (tolerance ± 30 HB)**
   - **Tensile Strength: U.T.S. = 1300 MPa**
   - **Yield Point: Y.P. = 1000 MPa**
   - **Tolerances according to specifications of Dillidur 400V.**
   -

3. **Rubber: The blade shall have a wear resistant rubber body, vulcanized between the two steel plates with tungsten carbide holders and inserts embedded within the rubber.**

4. **Tungsten Carbide Inserts:**
   - **Tungsten carbide inserts shall be centrically embedded on the lower end of a steel plate (=steel carbide holder).**
   - **The inserts shall be a high shock WC Grade of tungsten and shall meet Virgin Tungsten Carbide quality specifications and the following requirements:**
     1. **Hardness: 1100-1300 HV10 ISO 3878**
     2. **Bending Strength: 2700 N/mm (squared) ISO 3327**
     3. **Average Grain Size: 5 – 7 µm**
     4. **Density: 14,40 g/cm³ ISO 3369**
     5. **Insert Dimensions:**
     6. **Height: 17,5 mm**
     7. **Width, 8 mm**
     8. **The groove for the carbide shall be milled in the center of the steel carbide**

holder. The groove shall be milled to a depth that will allow the inserts to be brazed flush with the bottom edge of the carbide holder.

9. **Each insert shall be max. two-inches nominal length.**
10. **The inserts shall be brazed on all contact surfaces consistent with sound brazing practice with no evidence of voids or use of shims. Brazing shall be of such strength and quality as required to prevent movement or loss of the inserts during use.**

3. Finished Blades

3.1 Overall blade dimensions:

1. **Blade Thickness in wear area: 40 mm (tolerance ± 2mm)**
2. **Overall Blade Height: 187 mm (tolerance ± 2mm)**

3.2 Physical Requirements. All blades shall be straight and free from flaws and injurious defects, and shall have workmanlike finish.

3.3 Tungsten carbide holders shall be placed free-floating in the rubber body. Thus there has to be a slight gap between two holders in order for the holders to act independently of one another and "flex". In length carbide inserts should cover no less than 90% of the total length of the blade.

3.4 Punching shall be square or round holes. Details, location, and spacing of the holes shall be to customer requirements.

3.5 Blade punching will be of such accuracy, both for the spacing between holes and for the spacing between the end hole and the end of the blade, that the blades will fit the moldboards, thus making the blade sections interchangeable.

3.6 Blades shall be painted and any paint used to coat the blades shall be dry prior to shipment and shall not smear or track during handling.

3.7 Each blade element should provide the name of the manufacturer and a serial number for quality control.

3.8 Finished blade sections shall be provided in units of three (3) feet, four (4) feet, five (5) feet, or any other measure in length.

3.9 The finished blade section shall be fully assembled by the manufacturer and require no additional assembly, no additional parts or hardware, and no mounting hardware other than bolts and nuts.

Figure 1: Blade Dimensions

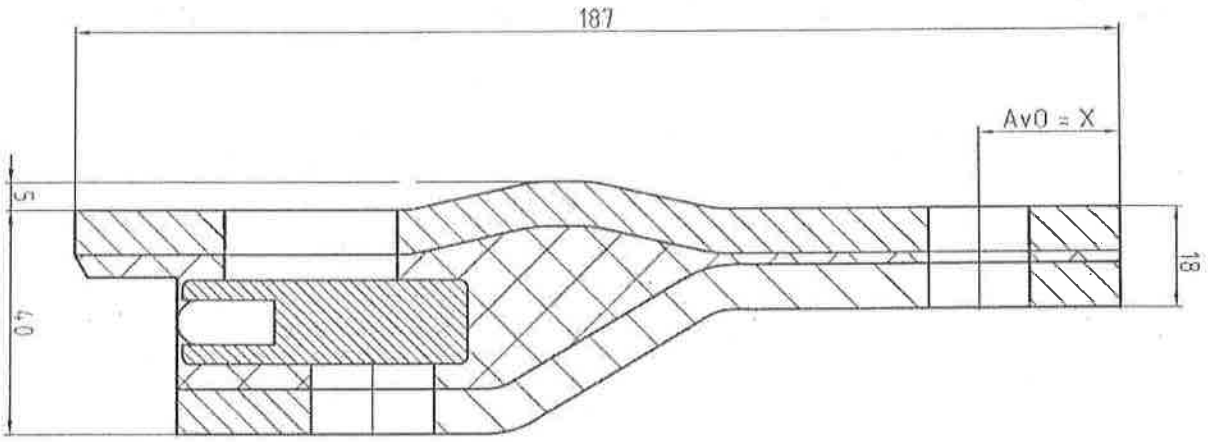

Figure 2: AASHTO Hole Positioning (4')

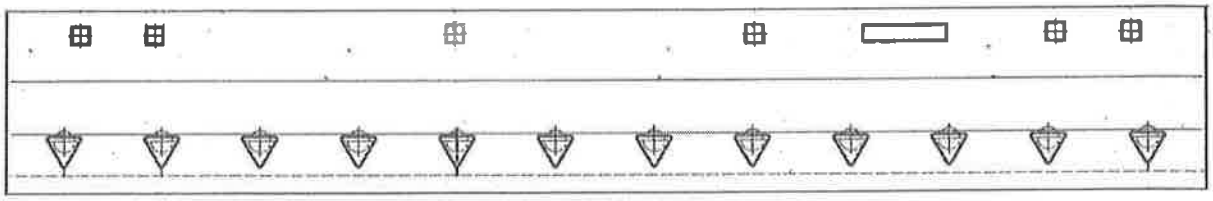

SNOW PLOW BLADE CUTTING EDGES
DETAILED SPECIFICATIONS
ALASKA

No. 1 - Regular Curved Blades:

Blades shall be heat treated, through hardened, with a Rockwell hardness of 43 to 55 or a Brinell hardness of 408 to 548, and rated EXTREME SERVICE. Blade width shall be 8 inches. Blades shall have the following bolt hole spacing: the first two holes on each end of the blade shall be 3 inches apart; the remaining holes shall be 6 inches apart. Example: (3-3-6-6). Bolt holes shall be square and countersunk.

Length of blades shall be one of the following standard sizes:

1-a: 3 feet
1-b: 4 feet
1-c: 6 feet
1-d: 7 feet
1-e: 8 feet

Blade thickness shall be either:

1-f: 3/4 inch
1-g: 1 inch

Blades shall be curved with double bevel sections having standard AASHTO highway punching for either:

1-h: 5/8 inch diameter bolts
1-i: 3/4 inch diameter bolts

No. 2 - Regular Flat Blades / Heat Treated:

Blades shall be heat treated, through hardened, with a Rockwell hardness of 43 to 55 or a Brinell hardness of 408 to 548. Blades shall be either top punched or center punched, as specified in the order. Blades shall have the following bolt hole spacing: the first two holes on each end of the blade shall be 3 inches apart; the remaining holes shall be 6 inches apart (3-3-6-6). Bolt holes shall be square and countersunk.

Length of blades shall be one of the following standard sizes:

2-a: 4 feet
2-b: 5 feet
2-c: 6 feet
2-d: 7 feet
2-c: 8 feet
2-f: 9 feet
2-g: 10 feet

2-h: 11 feet
2-i: 12 feet
2-j: 14 feet

Blade width shall be either:
2-k: 6 inches
2-l: 8 inches
2-m: 10 inches

Blade thickness shall be either:
2-n: 1/2 inch
2-o: 3/4 inch
2-p: 7/8 inch
2-q: 1 inch

Blades shall be flat sections having standard AASHTO highway punching for either:
2-r: 5/8 inch diameter bolts
2-s: 3/4 inch diameter bolts

No. 3 - Regular Flat Blades / High Carbon:

Blades shall be high carbon with a Rockwell hardness of 24 to 36 or a Brinell hardness of 247 to 337. Blades shall be either top punched or center punched, as specified in the order. Blade width shall be 8 inches. Blades shall have the following bolt hole spacing: the first two holes on each end of the blade shall be 3 inches apart; the remaining holes shall be 6 inch apart (3-3-6-6). Bolt holes shall be square and countersunk.

Length of blades shall be one of the following standard sizes:
3-a: 9 feet
3-b: 12 feet
3-c: 14 feet

Blade thickness shall be either:
3-d: 3/4 inch
3-e: 5/8 inch
3-f: 7/8 inch

Blades shall be flat sections having standard AASHTO highway punching for either:
3-g: 5/8 inch diameter bolts
3-h: 3/4 inch diameter bolts

No. 4 - Scarifier Blades/1.4" Tooth Width:

Blades shall be heat treated, through hardened with a Rockwell hardness of 38 to 50 or a Brinell hardness of 357 to 488. Blade width shall be 8 inches. Blades shall have the following bolt hole spacing: the first two holes on each end of the blade shall be 3 inches apart; the remaining holes shall be 6 inches apart (3-3-6-6). Bolt holes shall be square and countersunk.

Length of blades shall be one of the following standard sizes:

4-a: 3 feet
4-**b**: 4 feet
4-c: 6 feet
4-d: 7 feet

Blade thickness shall be either:

4-e: 3/4 inch
4-f: 1 inch

Blades shall be curved, double bevel sections, having standard AASHTO highway punching for either:

4-g: 5/8 inch diameter bolts
4-h: 3/4 inch diameter bolts

Teeth shall be of straight design with 1inch spacing. Teeth shall be 1.4 inch wide by either:

4-i: 4.25" long
4-**j**: 2.5" long

No. 5 - Scarifier Blades / 2.5" Tooth Width:

Blades shall be heat treated, through hardened, with a Rockwell hardness of 38 to 50 or a Brinell hardness of 357 to 488. Blade width shall be 8 inches. Blades shall have 2.5 inch tooth width. Blades shall have the following bolt hole spacing: the first two holes on each end of the blade shall be 3 inches apart; the remaining holes shall be 6 inches apart (3-3-6-6). Bolt holes shall be square and countersunk.

Length of blades shall be one of the following standard sizes:

5-a: 3 feet
5-b: 4 feet
5-c: 6 feet
5-d: 7 feet

Blade thickness shall be either:

5-e: 3/4 inch
5-f: 5/8 inch

5-g: 1 inch

Blades shall be curved, double bevel sections, having standard AASHTO highway punching for either:

5-h: 5/8 inch diameter bolts
5-i: 3/4 inch diameter bolts

Teeth shall be of straight design with 1-1/2" spacing. Teeth shall be 2-1/2" wide by either:

5-j: 4.25 inch long
5-k: 2.5 inch long

No. 6 - Single Carbide Insert Blades:

Blades shall be flat, hot rolled steel, must meet or exceed grade SAE 1020 specifications. Length of blades shall be one of the following standard sizes:

6-a: 3 feet
6-b: 4 feet
6-c: 5 feet

Blade width shall be either:

6-d: 5 inches
6-e: 6 inches
6-f: 8 inches

Blade thickness shall be either:

6-g: ¾ inch
6-h: 7/8 inch
6-i: 1 inch

Blades shall be top punched 1.5 inches from the top of the blade to the center of the line of bolt holes. The first two holes on each end of the blade shall be 3 inches apart, center-to-center, the remaining holes shall be 6 inches apart center-to-center. Example: (3"-3"-6"-6"-6"-6"-3"-3"). The slots for the carbide inserts shall be milled in the center of the blade edge. The inserts shall be high shock WC grade Tungsten Carbide with 11% to 12.5% cobalt content. The carbide density shall be 14.1 (min.) to 14.6 (max.) gms/cc. The carbide insert hardness shall be from 87.5 (min.) to 89.0 (max.) on the Rockwell "A" scale. The inserts shall be of trapezoidal design and measure approximately .635 inch high x .365 inch thick x 1 inch long. The bottom angle shall be 25 degrees with a 1/16 inch minimum nose radius.

Blades shall be punched with square countersunk holes for either:

6-j: 5/8 inch diameter bolts

6-k: 3/4 inch diameter bolts

No. 7 - Dual Carbide Insert Blades:

Blades shall be flat, hot-rolled steel, must meet or exceed SAE 1020 specifications. Blade thickness shall be 7/8 inch. The blade length of the blade shall be one of the following standard sizes:

7-a: 2 feet
7-b: 3 feet
7-c: 4 feet
7-d: 5 feet

Blade width shall be either:

7-e: 5 inches
7-f: 6 inches

Blades are to be punched with square countersunk holes for either:

7-g: 5/8 inch diameter bolts
7-h: 3/4 inch diameter bolts

Blades shall be top punched 1.5 inches from the top of the blade to the center of the line of bolt holes. The first two holes on each end of the blade shall be 3 inches apart, center-to-center, the remaining holes shall be 6 inches apart center-to-center. Example: (3"-3"-6"-6"-6"-6"-3"-3"). The top edge of the blade (opposite the carbide edge) shall be beveled at a 32 degree angle leaving an approximately .34 inch blunt dimension at the end of the blade to fit to motor grader moldboards. There shall be two rows of Tungsten carbide inserts brazed into an open-faced recess along the entire bottom edge of the blade. The front row of inserts shall be rectangular and measure approximately .75" high x .32" thick with each insert approximately 2 inches long. The front row of inserts shall be a grade SP341 Macro crystalline type WC, tungsten carbide insert with a hardness of 83.5 - 85.0 on the Rockwell "A" scale. The second rear row of inserts shall be trapezoidal and measure approximately .63 inch high x .38 inch thick with each insert approximately 1 inch long. The bottom angle shall be 25 degrees with a 1/16 inch minimum nose radius. The second row of inserts to be a high shock WC grade of tungsten carbide with 11% to 12.5% cobalt content with a hardness from 87.5 (min.) to 89.0 (max.) on the Rockwell "A" scale.

No. 9 – Brand Specific Blades

All blades in this lot are brand specific. Only Caterpillar Inc. **part number 109-3124** will be accepted. No substitutions.

SNOW PLOW BLADE CUTTING EDGES
DETAILED SPECIFICATIONS
UTAH

1. General Information

2. References

2.1 **ASTM B276-05(2010)** Standard Test Method for Apparent Porosity in Cemented Carbides (or latest edition)

2.2 **ASTM B294-10** Standard Test Method for Hardness Testing of Cemented Carbides (or latest edition)

2.3 **ASTM B311-08** Standard Test Method for Density of Powder Metallurgy (PM) Materials Containing Less Than Two Percent Porosity.

2.4 **ASTM B390-92(2000)** Standard Practice for Evaluating Apparent Grain Size and Distribution of Cemented Tungsten Carbides (or latest edition)

3. Blade

3.1 The blade shall be flat hot-rolled finished steel to meet or exceed specifications for A36 or 1020 - type steel.

3.2 Dimensions:

Length: Blade shall be 48" long, (-0.06", + 0.00" long.)
Height: 6" (+.09", -.06")
Thickness: 0.75" (¾")

3.3 Punching shall be standard highway 11/16" square, counter-sunk to receive 5/8" diameter No. 3 head plow bolts, gauged 2" from the top of the blade to center of hole. The centerline of the holes shall be in line ±0.03" of established horizontal centerline and 0.06" of established vertical centerline.

3.4 Carbide inserts groove shall be milled in the center of the blade edge.

3.5 The finished blade section shall be free of warpage and longitudinal deviation not to exceed 0.125" in either direction in a four-foot section.

3.6 Identify each blade with the manufacturer's identification stamp or marking.

3.7 The finished sections shall have markings showing the front edge of the blade to avoid improper mounting.

4 Tungsten Carbide Inserts

4.1 The inserts shall be a high shock WC grade of tungsten carbide with

A. 11 to 12 percent cobalt content.

B. Tungsten carbide content 87.0 to 88.0 percent

C. All other constituents – not more than 1.0 percent maximum

4.2 Each blade section to contain one insert, one-inch nominal length for each inch of blade section length.

4.3 Inserts shall be constructed of tungsten carbide, rectangular in design. Each blade shall contain 48 inserts with the following dimensions:

Height:	0.760" +/- 0.010
Width:	0.360" +/- 0.005
Length:	1" nominal

4.4 Using a statistically valid sampling plan determine the following parameters are met with a minimum confidence level of 95 percent:

A. Surface cracks as determined by visual examination under a 3-power microscope – maximum of 15 percent of insets show cracks

B. Density: 14.0 to 14.5 g/cc

C. Hardness 88.0 to 90.5 HRA

D. Porosity: (1) A00 – A04
(2) B00 – B02
(3) C00 – C04

E. Grain size (1) 10M/10C
(2) 15 percent or less of samples have no large voids or "void clusters" when viewed under a 200-power microscope

4.5 The tungsten carbide inserts shall be positioned in the milled groove at approximately .010" between the inserts the entire length of each cutting edge section.

4.6 The difference between the highest and the lowest tip point between any two adjacent inserts shall not exceed 0.03" on any blade assembly.

4.7 Quality control documentation - Vendor shall furnish documentation that quality control testing of carbide inserts was conducted at the tungsten carbide manufacturing plant to confirm that the inserts meet the requirements 4.1 through 4.4

4.8 Quality Assurance Testing – Customer will select samples from supplied blades and subject them to Quality Assurance Testing. If Quality Assurance Testing does not confirm that the blades do not meet the specification then the blades will be rejected.

4.9 Customer reserves the right to test any snow plow blade supplied under this specification at any time. If customer testing fails to confirm vendor-supplied test results, the shipment represented may be rejected.

4.10 Disposition of Rejected Blades – Vendor shall remove rejected blades from Customer property and replace them at no cost to customer.

4.11 Alternative Disposition of Rejected Blades – Customer at its' sole discretion, may elect to use rejected blades with a net 25% reduction in payment to the vendor.

5.0 Brazing

5.1 Brazed alloy joint must be comprised of a high strength alloy material that has shear strength to withstand 30,000 minimum PSI. The filler material contains no cadmium.

5.2 Braze inserts on all sides consistent with sound brazing practice with no evidence of voids or use of shims. Due to the thickness of the braze joints between inserts it may be necessary for several inserts to be slightly shorter or longer than the nominal 1" length to insure the carbide insert runs the entire length of the blade without protruding from the end of the steel body.

SNOW PLOW BLADE CUTTING EDGES
DETAILED SPECIFICATIONS
NEW HAMPSHIRE

TUNGSTEN CARBIDE TIPPED SNOW PLOW BLADES

1. BLADE

1.1 Blades shall be flat hot-rolled finished steel SAE 1020 of domestic manufacture.

1.2 Punching shall be 11/16" square holes to receive 5/8" diameter carriage bolts. Location and spacing of the holes shall be as shown on the attached drawings.

1.3 The groove for the carbide inserts shall be milled in the center of the blade edge.

1.4 Center of holes shall be in line within 1/32" of established centerline.

2. TUNGSTEN CARBIDE INSERTS

2.1 The inserts shall be WC grade of tungsten carbide with 11% to 12% cobalt content.

Density: 14.1 minimum to 14.6 maximum.

Hardness: 87.5 minimum to 89.0 maximum Rockwell "A" Scale.

Transverse Rupture Strength (P.S.I.): 350,000 minimum.

Porosity: (ASTM B276-79) A 06
B 00
C 00

2.3 Insert Design.

The inserts shall be trapezoidal in shape to the following dimensions:

Height: .750 + .005 (Long side)

Width: .365 + .010

Length: 1 in. nominal

Bottom Angle: 25 degrees with a nose radius of 1/16" minimum.

2.4 A metallurgical evaluation of the carbide insert shall show no evidence of cross grade contamination. Evaluation to be based on a photo micrograph of a polished and etched specimen at 500X magnification.

3. BRAZING

3.1 The brazing material shall be a high strength alloy type. The braze shear strength to be 30,000 psi minimum.

3.2 The tungsten carbide inserts shall be positioned in the milled groove at .010 between the inserts the entire length of each cutting edge section.

3.3 The inserts shall be brazed on all sides consistent with sound brazing practice with no evidence of voids or use of shims.

3.4 Each blade section to contain one insert, one-inch nominal length for each inch of blade section length. Reference 2.3.

4. SPECIFIC REQUIREMENTS

4.1 The complete cutting edge shall consist of a combination of three sections with the two end sections interchangeable.

4.2 The difference between the highest and lowest tip point between two adjacent inserts is not to exceed 1/32" on any given blade assembly.

4.3 The finished blade sections shall be free of warpage and longitudinal deviation not to exceed 1/8" in a 44" blade section.

4.4 Each blade section shall be identified with the manufacturer's identification stamp, month and year on each end of the section.

4.5 The finished blade sections shall be given one coat of * "lead free" rust resistant lacquer and with markings showing the front of the blade to avoid improper mounting. However, the carbide edge of the blade section shall not be lacquer coated to allow ready physical inspection.

4.6 Each blade is to be numbered at each end by stamping onto the metal 3/8" letters and numerals either 28C, 40, 44C or 44E as appropriate.

5. SPECIAL PROVISIONS

5.1 The Vendor guarantees the finished product to meet all specifications and to be free from defects in materials and workmanship and that it will perform the

work of snow, ice and slush removal when in use on all types of paved systems. The Vendor also guarantees to make an adjustment to the customer for a period of 30 months after acceptance by the customer on any blade section with 25% or more of wear left in the edge which fails in any of the following respects:

1. Loss of one or more carbide tips.

2. Shattering along the longitudinal plane.

3. Shattering along a plane in or about the line of travel.

Wear on a blade section is defined as follows:

* "Lead free"- shall be consistent with 16 CFR Part 1303,2(b)(2).

The amount of wear on a blade section shall be determined by measuring the depth remaining on the insert nearest each end of the blade section which has not been damaged due to side exposure; taking the average of the depths so measured; and indicating this average depth as a percentage of the depth of an insert as originally mounted in the blade section. The depth measurement will be taken parallel to the plane of the blade section.

5.2 The Vendor's guarantee will not apply when the cause of failure of a blade section can be attributed to negligence on the part of the operator, such as, but not limited to; striking abutments or other obstructions, faulty installation of a blade section; uneven plow balance; or other poor operating practices.

The customer warrant in requesting any adjustment on a blade section that:

1. The blade section was used only in the manner ordinarily employed in the removal of snow, ice and slush.

2. The blade section was securely bolted to the moldboard when in use to prevent blade chatter.

3. Inspection was made before each patrol of the blade sections to insure that all bolts were tight.

5.3 Adjustments on blade sections under Paragraph 5.1 subject to the provisions of Paragraph 5.2 will be made by the Vendor as follows:

a. The Vendor will replace without charge any blade section which fails in any respect enumerated before 25% wear has occurred.

b. If blade section failure occurs after 25% of the wear life of the blade has occurred and before 75% of the wear life has occurred, the Vendor will replace the blade section for a charge which is proportional to the amount of service life rendered for the blade section based on the wear which has occurred.

c. There shall be no replacement of, or adjustment on, a blade section which has less than 25% wear life left therein.

5.4 Each blade section on which a claim of adjustment is made will be returned promptly by the customer to the Vendor, freight prepaid, with a written claim for adjustment.

The Vendor, upon determining that an adjustment on the blade section is in order, will notify the customer that an adjustment is to be made and what charge, if any, is to be made for the adjustment, and will ship promptly the replacement blade section to the customer, freight prepaid.

5.5 Each bidder shall submit a sample blade section for examination of workmanship acceptability. The blade section submitted by the successful bidder shall be retained by the State as a standard for quality comparison purposes against the delivery quantity.

5.6 Each bidder shall submit a shop drawing of the blade sections with the proposal.

SNOW PLOW BLADE CUTTING EDGES
DETAILED SPECIFICATIONS
NEW HAMPSHIRE

Grader Blades

All blades are to be domestic or Canadian manufactured and must be of North American steel.

Blades are to be through hardened to Brinell 400 minimum and carry a full guarantee against breakage. If a blade brakes during its lifetime it shall be replaced without charge by the vendor. Blades are to have both edges beveled, both ends square, with 6" punching for 5/8" No. 8 plow bolts, lacquered but without nuts and bolts. The bevel and edge thickness dimensions are to be to the manufacturer's standard.

Length	plus or minus' 1/16"
Cord width	plus 1/8" minus 3/32"
Thickness	plus or minus 1/64"
Camber	1/8" in 5' maximum
Shipping wt.	3/4" x 72" blade approx. 113 Lbs.
	3/4" x 84" blade approx. 132 Lbs.

Blades shall be painted with rust inhibiting lead free paint on all sides. Material safety data sheets for paint used must accompany all shipments.

Blades subject to test and inspection upon delivery.

Blades must be packaged 10 per bundle.

SNOW PLOW BLADE CUTTING EDGES
DETAILED SPECIFICATIONS
MAINE

Bucket Blades

All blades are to be domestic or Canadian manufactured and must be of North American steel.

Blades are to be through hardened to Brinell 400 minimum and carry a full guarantee against breakage. If a blade should break during its lifetime it shall be replaced without charge by the vendor. Blades to have a 30 degree beveled edge, both ends square. Bucket blade specification BB1 to BB4 have a 13/16" square punched hole, 1 5/16" countersunk to accommodate a 3/4" grade 8 plow bolt with No. 3 head. Bucket blade BB5 must have a 11/16" square punched hole countersunk to 1 1/16" to accommodate a 5/8" grade 8 plow bolt with a No. 3 head. Blades BB6 and BB7 shall be punched and countersunk for 1" No. 3 plow bolts.

Blades shall be painted with rust inhibiting lead free paint on all sides.
Material safety data sheets for paint used must accompany all shipments.

Blades will be subject to inspection upon delivery.

Blades must be packaged 10 per bundle.

RC42 - 50 below decarb.

RC30 minimum at .48.

BB3 = Bucyrus Part No. 101639M & John Deere Part No. T146672

BB$ = Bucyrus Part No. 101638M & Valk Part No. HEAFDB.625x8x8

SNOW PLOW BLADE CUTTING EDGES
DETAILED SPECIFICATIONS
NEW HAMPSHIRE

FLEXIBLE PLOW BLADES

Plow Edge

General Specifications

The plow edge blade shall consist of individual steel segments encased in rubber with steel bushings positioned on 12" centers for mounting to the plow. Each segment shall be milled to a special shape and profile and inserted with tungsten carbide bits, brazed in place along the wear edge.

Finished Specifications

The finished blade shall be approximately 7/8" thick by 6" wide weighing 9.75 lbs. per foot. *11/16"* ID steel bushings shall be located 1.5" from the top of the blade on 12" centers to facilitate mounting to the *plow*. Each blade shall have blade orientation embossed in the rubber casing.

A 1/2" x 3" heat-treated 15B30 clamp bar shall be mounted on top of the plow blade to hold the blade on the plow. This clamp bar weighs approximately 5 lbs. per foot and has 11/16" square holes located on 12" centers to align with the bushings in the blade and shall be a part of the plow edge.

Complete nut and bolt sets shall be provided with each plow edge.

Steel Segment

1. Cast steel 0.75" thick by 5" wide and 11.22" long.
2. The top 3.125" of the segment shall be milled down to 0.625" thick.
3. The lower, inserted section shall remain 0.75" thick. Slots measuring 8.2 mm wide x 24.5 mm deep shall be milled in this portion to receive tungsten carbide inserts and braze matrix.
4. The segment shall be cast to a 'horseshoe' design. The upper ears shall measure 2.55" wide (each with a 0.50" x 2.00" clip on the outside edges). The cutout measures shall be 6.13" x 2.8125" with 1" rads in the two lower corners

Tungsten Carbide Inserts

1. High shock resistant grade tungsten carbide.
2. Rooftop shape shall measure approximately 8.16mm thick, 24.25 mm tall and 25.9mm long.
3. Each insert shall weigh approximately 69 grams.
4. Each finished segment shall have 11 inserts (approximately 759 total grams of carbide insert material).
5. Tungsten carbide shall be 89% by physical weight – 100% virgin materials
6. Specific gravity shall be 14.35 to 14.6.
7. Hardness shall be 87.5 – 88.8 Rockwell A
8. Transverse rupture strength shall be 351,000 – 428,000 psi.

Braze

1. Inserts shall be brazed on all sides using Nickel/Silver braze
2. Shear strength shall be approximately 70,000 psi.
3. Maximum height difference between highest and lowest inserts shall be 1/32" in each 11.22" segment
4. Braze Composition Shall Be:

Copper/Silver	46.0-50.0%
Silicone	0.04-0.25%
Nickel	9.0-11.0%
Phosphorus	0.25%
Aluminum	0.01%
Lead	0.05%
Zinc	Remainder

Rubber Matrix

1. Typical Physical Properties Shall Be:

Ultimate Elongation	582%
100% Modulus	276 psi.
Tensile Strength	3113 psi.
Shore A Durometer	60 pts.
Tear Strength	341 psi.
Compression Set	26.5%
Brittleness	No cracks at –40C

Adapter Blade

Blade

1. Blade shall be ASTM A36 Structural Grade hot rolled flat steel. Blade size is 3/4" x 7" x 3 ft. or 4 ft. long.
2. Blade to have (2) sets of holes. The top set is an 8" on center punch pattern with holes drilled, counter-sunk, and square punched to accommodate a 5/8" plow bolt. The bottom set of holes has a 3-3-12 punch pattern, and are drilled thru at 11/16" diameter.
3. Dimensional tolerance between hole spacing is +/- 1/16" (non-accumulative) from center to center across the full length of blade.
4. The milled channel for carbide insert retention shall be positioned in the center of the blade edge.
5. Each blade will have weld stops positioned to enhance the performance of the blade assemblies.

Carbide Inserts

1. Inserts shall be trapezoidal in design, with the following dimensions:
    a. Length: 1.0" nominal
    b. Width: 0.36" min.
    e. Height: 0.63" max.
    d. Top angle: 25° with nose radius of 0.06"
2. Inserts to contain 89% tungsten (average by weight) and shall be of a grade containing 11% cobalt (average by weight).
3. Specific gravity (density) shall be between 14.35 and 14.60 gm/cc.
4. Hardness shall be Ra scale between 87.5 and 88.8, and have a minimum traverse rupture strength of 351,000 psi.

Brazing

1. Each blade shall contain approximately (1) 1" carbide insert for each 1" of blade length.
2. The carbide inserts shall be placed in-line within the milled channel.
3. The carbide inserts shall be brazed on all sides in contact with the blade using sound brazing practice, having no evidence of voids, and no use of shims or fillers.
4. Brazing material shall have a tensile strength of 70,000 psi.

Finished Product

1. Carbide tip points shall not exceed 1/32" between the highest and lowest point within any blade.
2. Finished blade will receive a complete powder coat (black) process for rust prevention. Front face of blade will be identified for proper installation.
3. Finished product will comply with standard blade manufacturing tolerances.
4. Manufacturer's literature shall be furnished as required.
5. Complete plow set-up will generally consist of a combination of (3) blade sections.
6. Complete nut and bolt sets shall be provided with adapter blades.

Curb Runner Guard

Steel

High impact, ASTM Grade A-36 Hot Rolled bar stock, 3/4" thick.

Bolt Holes

Drilled and square punched with countersink (3) places to accept 5/8" Plow Bolt flush with front mounting blade surface.

Rust Prevention

Chip and corrosion resistant Powder Coat (Black) on all surfaces. Bright Safety Orange paint over Powder Coat in carbide matrix area.

Curb Runner Casting

A-22 Cast Steel material with (O.9 lbs.) of carbide matrix.

Part Identification

Each curb runner guard has a label on the front mounting blade surface identifying the manufacturer and contact information.

Carbide Matrix Chemistry

Material	Minimum Value
Carbon	4.0
Silicon	0.5
Chrome	25.00
High Temp Carbide Formers	0.5
Nitride Formers	0.5
FE	Balance
Rc Hardness	55

Painting – All Flexible Plow Blade Equipment

All surfaces which are normally painted shall be painted with coatings suitable for severe exposure to road salt and abrasion.

SNOW PLOW BLADE CUTTING EDGES
DETAILED SPECIFICATIONS
CONNECTICUT

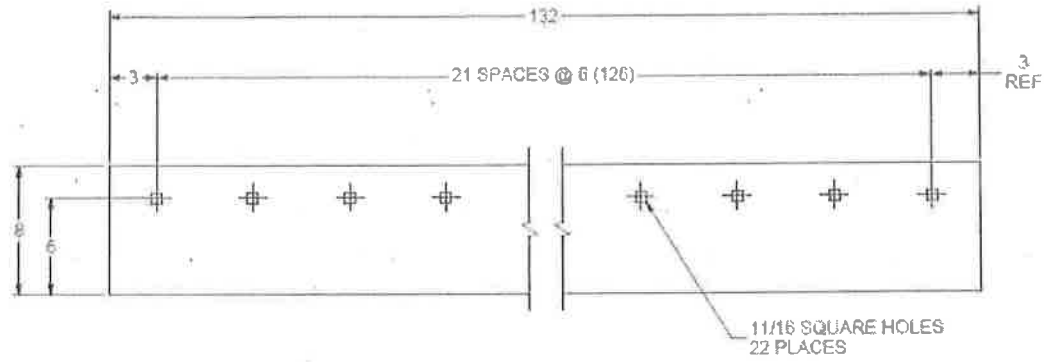

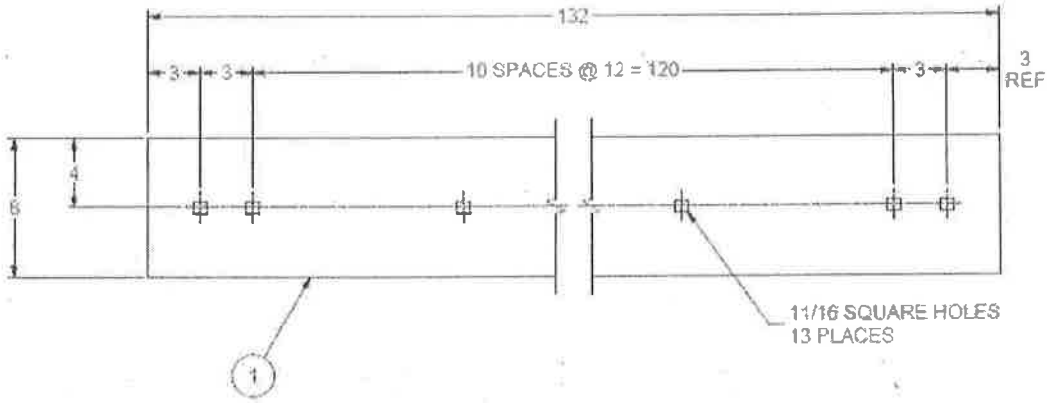

Above are the current plow punch patterns. The top drawing indicates 21 punches at 6 inch intervals. The bottom drawing indicates the standard AASHTO punch pattern. The bottom drawing is currently being with this punch.

8 inch top punch style plow blades made with C-1080 grade steel with a Brinell hardness range of 229-350

5/8 and 3/4 inch thick plow blades in the AASHTO punch pattern

SNOW PLOW BLADE CUTTING EDGES
DETAILED SPECIFICATIONS
COLORADO

SP-CAR-V-97
TUNGSTEN CARBIDE INSERTS

1. FUNCTIONAL REQUIREMENTS:

A. Have 3"-3"-12" etc 12"-3"-3" punching, 11/16" SQ. countersunk holes. Holes shall be spaced accurately with 12" center to center on a straight line and located within 1/16"of true position using both end holes as data points. The 1/16"shall be +/- non-accumulative. The first hole on left end is to be spaced 3" from the end. The right end of the blade is to be spaced the same as the left end. The gauge line of the hole is 11/2"from top edge of the blade to the center of the holes.

B. Must be flat with square edges.

C. Blade shall be constructed of carbon steel with Tungsten Carbide inserts. The Carbide inserts shall be trapezoidal in design, with the following dimensions:

Length 1" nominal
Height .750" +/- .005"
Top Angle 25-degree +/- 1 degree with nose radius of 1/16".

Insert hardness shall be 87 to 88.5 RA scale with a transverse rupture strength of at least 350,000 PSI.

D. All blades will be 3/4" thick.

E. Each blade may be coated with rust-preventative paint and completely dried prior to being bundled, or blades may be left unpainted.

F. The blades offered must be guaranteed against breakage. The vendor
Shall replace, at no cost, any blade that breaks during its useful life.
G. ALL BLADES MUST BE PACKAGED IN BUNDLES OF 10 EACH.

SNOWPLOW BLADES
SP-V-97
THROUGH HARDENED HEAT TREATED

1. FUNCTIONAL REQUIREMENTS:

A. Have 3"-3"-12" etc 12"-3"-3" punching, 11/16" SQ. countersunk holes. Holes shall be spaced accurately with 12" center to center on a straight line and located within 1/16"of true position using both end holes as data points. The 1/16"shall be +/- non-accumulative. The first hole on left end is to be spaced 3" from the end. The right end of

the blade is to be spaced the same as the left end. The gauge line of the hole is 11/2"from top edge of the blade to the center of the holes.

B. Must be flat with square edges.

C. Deleted wording here.

D. The blade shall be constructed of through hardened heat-treated alloy steel manufactured to a uniform range on the Rockwell C (RC) and Brinell scales. It shall be not less than RC 43 or more than RC 54.When Brinell tested it shall not be less than 400 or more than 528 using the 10mm carbide ball with 3000 kgf load.

E. All blades will be 3/4" thick.

F. Each blade may be coated with rust-preventative paint and completely dried prior to being bundled, or blades may be left unpainted.

G. The blades offered must be guaranteed against breakage. The vendor shall replace, at no cost, any blade that breaks during its useful life.

H. ALL BLADES MUST BE PACKAGED IN BUNDLES OF 10 EACH.

GRADER BLADES
GB-V-97
THROUGH HARDENED, HEAT TREATED

1. FUNCTIONAL REQUIREMENTS:

A. Have standard square highway punching, 11/16" and countersunk on cutting side. Holes shall be spaced accurately, 6" center to center on a straight line and located with 1/16" of true position using both end holes as data points. The 1/16" shall be +/- nonaccumulative. The first hole on left end is to be spaced 3" from the end with the 2nd hole 3" from the first hole. The right end is to be spaced the same as the left end. Holes to be punched
2" from top of the blade to center of holes.

B. Must be curved and double beveled.

C. The cutting edge and moldboard edge shall have approximately a one-inch bevel.

D. The blade shall be constructed of through hardened heat-treated alloy steel manufactured to a uniform range on the Rockwell C (RC) and Brinell scales. It shall be not less than RC 43 or more than RC 53. When Brinell tested it shall not be less than 400 or more than 528 using the 10mm carbide ball with 3000 kgf load.

E. All grader blades will be 5/8" thick.

F. Each blade may be coated with rust-preventative paint and completely dried prior to being bundled, or blades may be left unpainted.

G. The grader blades offered must be guaranteed against breakage. The vendor shall replace, at no cost, any blade that breaks during its useful life.

DELIVERY REQUIREMENTS:

Materials must be delivered to storerooms statewide as indicated on the purchase order.

All blades to be packaged in quantities of 10 each

Vendor is to deliver entire order, no partials accepted.

Delivery of items in a timely manner is critical. Therefore, the expected delivery date or delivery time period after receipt of order (ARO) is to be 30 days.

SNOW PLOW BLADE CUTTING EDGES
DETAILED SPECIFICATIONS
NEW YORK

Item# 8 - SECTION CENTER - CARBIDE INSERT BLADE
3/4 X 6 X 28 IN.

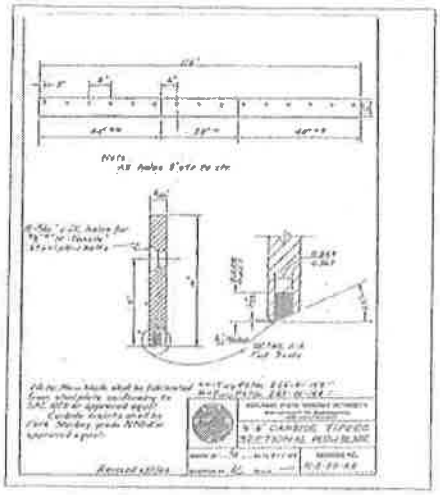

\TWY-PARTS-NO\11-EQUIPMENT MAINTENANCE\11-2-05\DAO

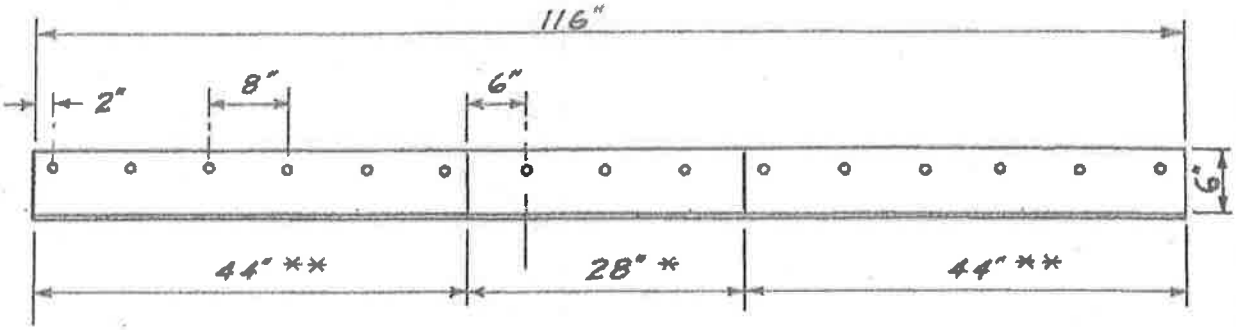

Note:
All holes 8" ctr. to ctr.

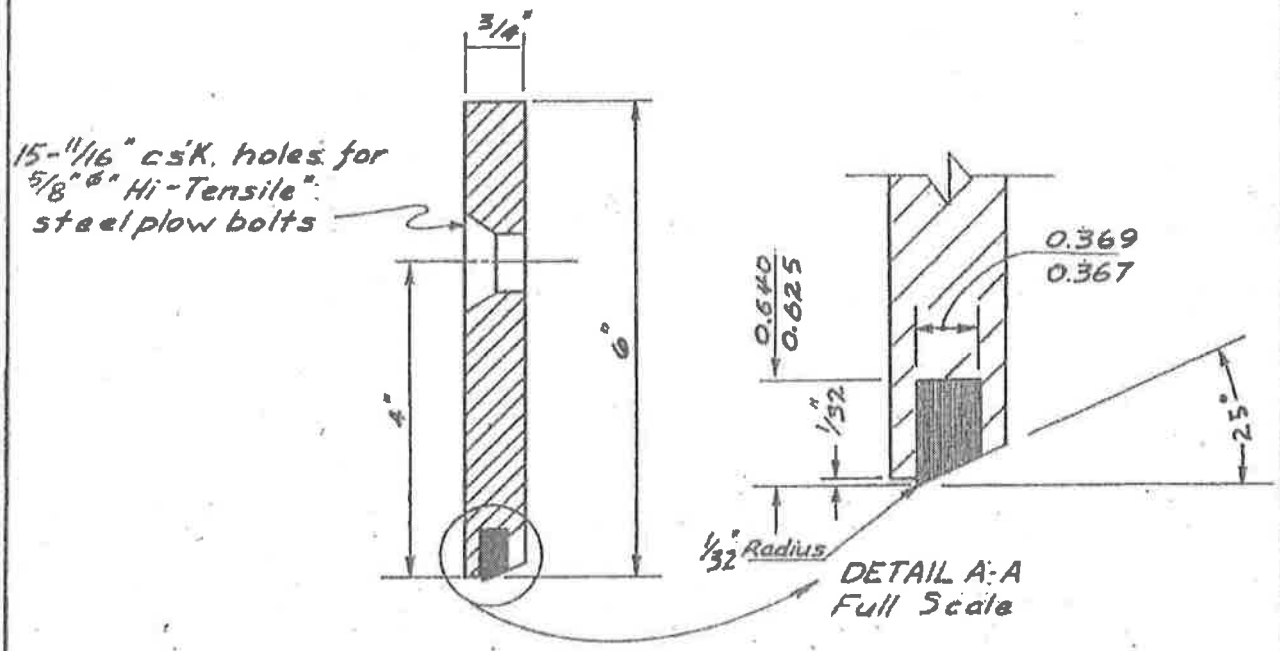

Note: Plow blade shall be fabricated from steel plate conforming to SAE 1020 or approved equal
Carbide inserts shall be Firth Sterling grade MPD-11 or approved equal.

**-Twy Pt. No. 265-01-145
*-Twy. Pt. No. 265-01-144

Revised 6/17/68

NEW YORK STATE THRUWAY AUTHORITY	
DEPARTMENT OF ENGINEERING NEW YORK STATE THRUWAY AUTHORITY	
9'-8" CARBIDE TIPPED SECTIONAL PLOW BLADE	
9'-8" CARBIDE TIPPED SECTIONAL PLOW BLADE	DRAWING NO.
DRAWN BY: LS DATE: 6/14/66	11-2-50-A0
CHECKED BY: LC SCALE: N.T.S.	11-2-50 AO

10	SECTION 5-HOLE CARBIDE INSERT WING
	BLADE 3/4 X 6 X 42
11	SECTION 5-HOLE CARBIDE INSERT WING
	BLADE 3/4 X 6 X 40 IN
12	SECTION 6-HOLE CARBIDE INSERT WING
	BLADE 3/4 X 6 X 46 IN

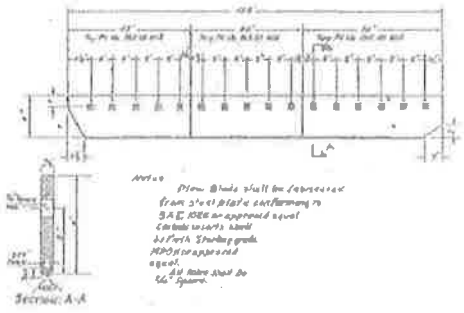

\TWY-PARTS-NO\11-EQUIPMENT MAINTENANCE\11-2-066AO

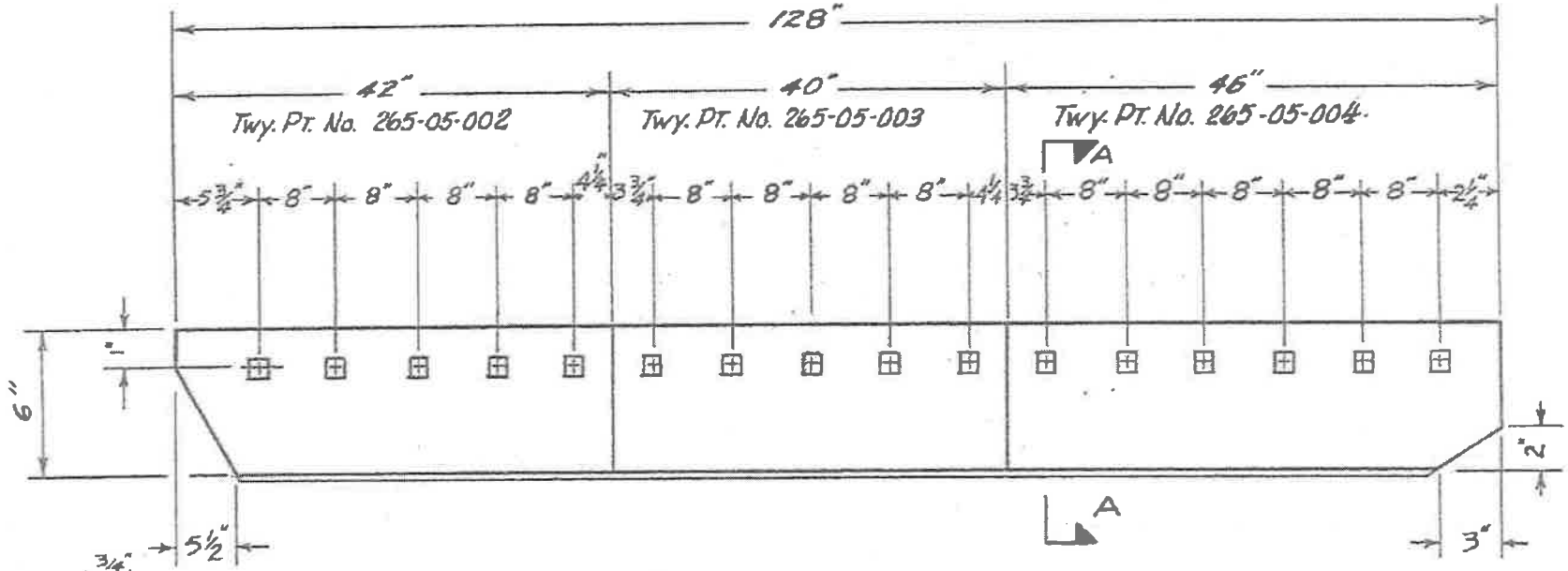

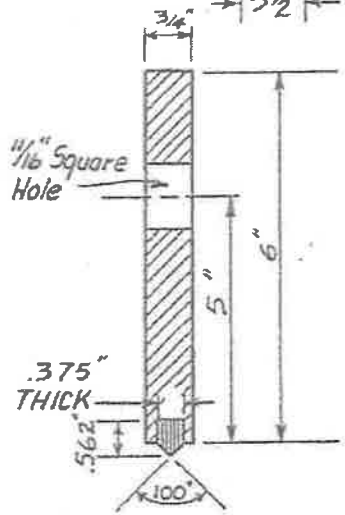

SECTION: A-A

Notes:

Plow Blade shall be fabricated from steel plate conforming to SAE 1020 or approved equal. Carbide inserts shall be Firth Sterling grade MPD11 or approved equal. All holes shall be 11/16" Square.

NEW YORK STATE THRUWAY AUTHORITY DEPARTMENT OF ENGINEERING SERVICES	
12'-0" CARBIDE TIPPED SECTION WING BLADE	
DRAWN BY: LS DATE: 5/14/73 CHECKED BY: LC SCALE: N.T.S.	DRAWING NUMBER: 11-2-66 AO

ATTACHMENT D
81 of 102

Item # 14 – Section End Carbide
Insert Blade ¾ x 6 / 38 In. 5 - Hold

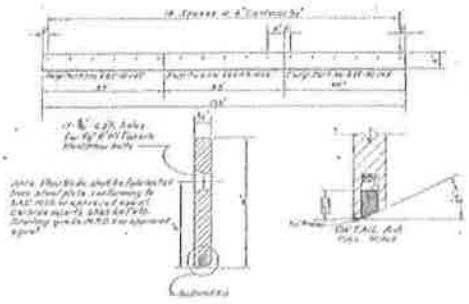

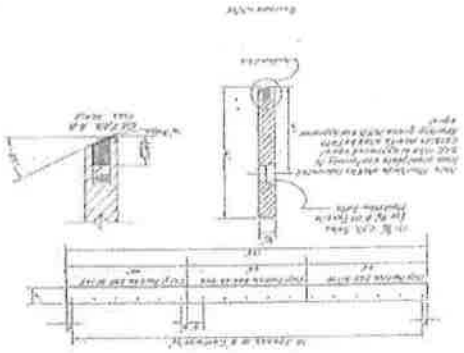

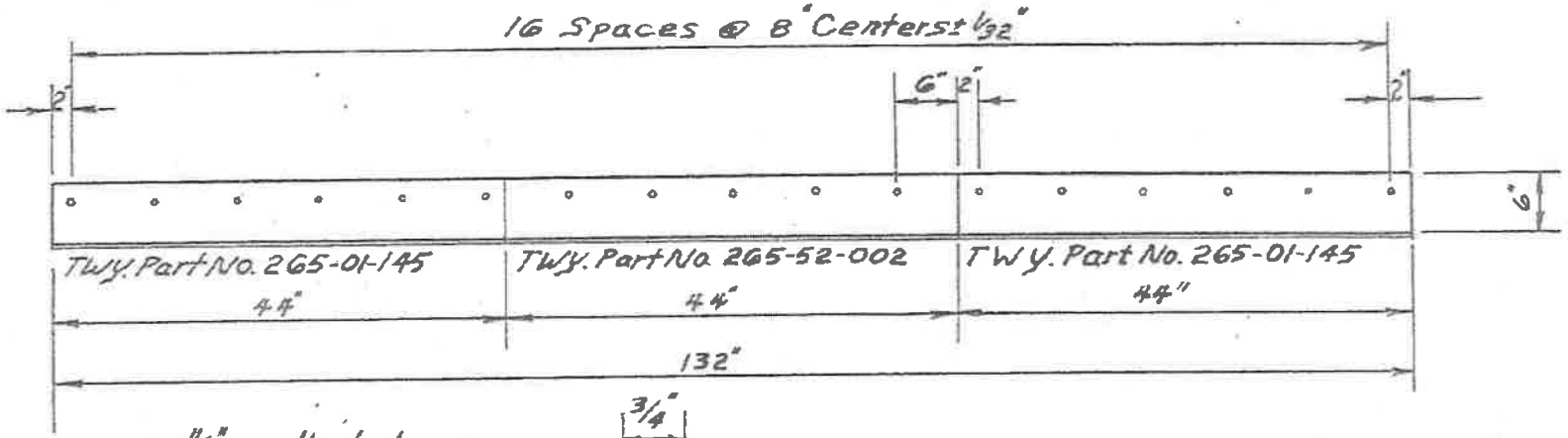

17-11/16" C'sk. holes for 5/8" ø Hi Tensile steel plow bolts

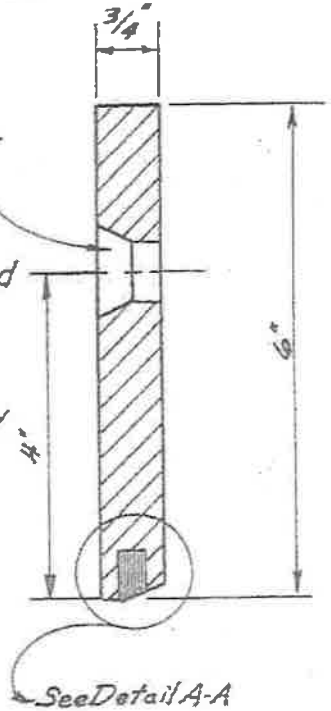

Note: Plow blade shall be fabricated from steel plate conforming to SAE 1020 or approved equal. Carbide inserts shall be Firth Sterling grade M.P.D. 11 or approved equal.

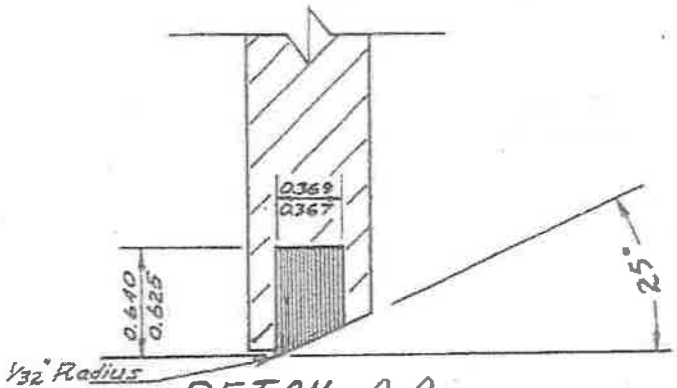

DETAIL A-A
FULL SCALE

Revised 6/9/75

NEW YORK STATE THRUWAY AUTHORITY
DEPARTMENT OF ENGINEERING SERVICES

11'-0" CARBIDE TIPPED SECTIONAL PLOW BLADE

DRAWN BY: LS DATE: 6/29/67
CHECKED BY: HB SCALE: N.T.S.
DRAWING NUMBER: 11-2-56 BO

ATTACHMENT D
84 of 102

\TWY-PARTS-NO\11-EQUIPMENT MAINTENANCE\11-2-08AT

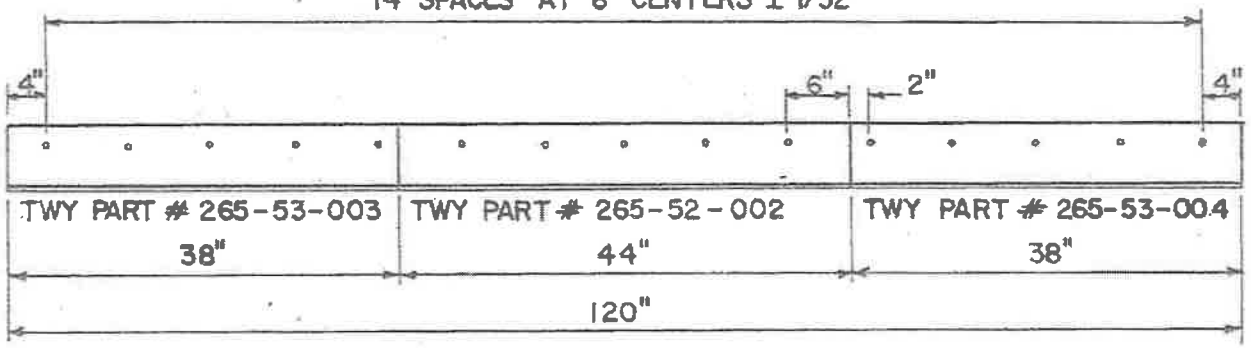

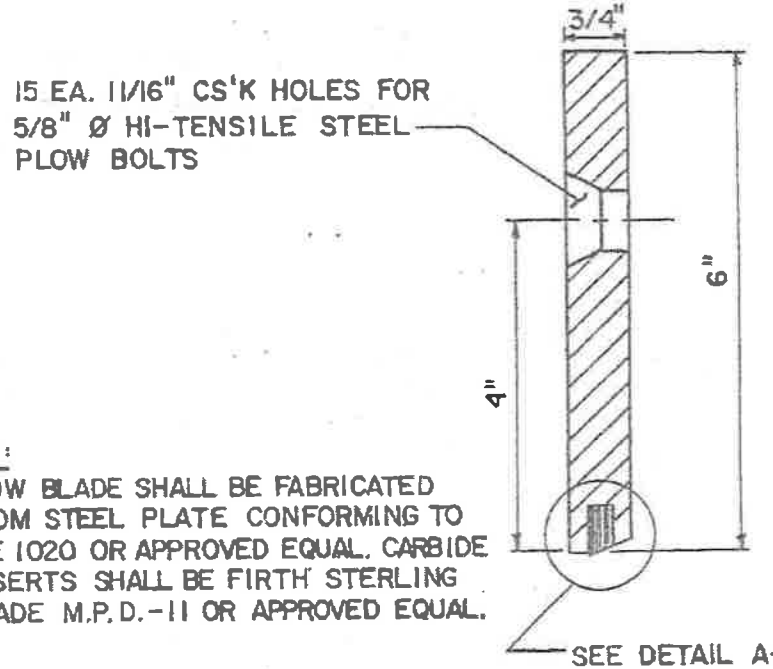

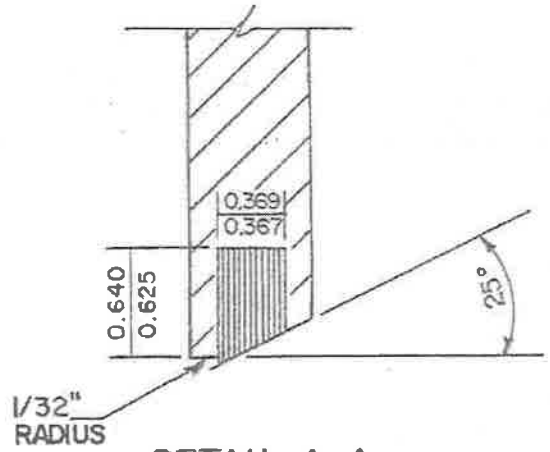

DETAIL A-A
FULL SCALE

NOTE:
PLOW BLADE SHALL BE FABRICATED FROM STEEL PLATE CONFORMING TO SAE 1020 OR APPROVED EQUAL. CARBIDE INSERTS SHALL BE FIRTH STERLING GRADE M.P.D.-11 OR APPROVED EQUAL.

14	SECTION END CARBIDE INSERT BLADE 3/4 X 6 X 38 IN.5-HOLE

NEW YORK STATE THRUWAY AUTHORITY
DEPARTMENT OF ENGINEERING SERVICES

10'-0" CARBIDE TIPPED SECTIONAL PLOW BLADE

DRAWN BY: PAK	DATE: 2/13/94	DRAWING NUMBER: 11-2-80 AT
CHECKED BY: LC	SCALE: N.T.S.	

Item # 16	EDGE WING 12 FT 212112

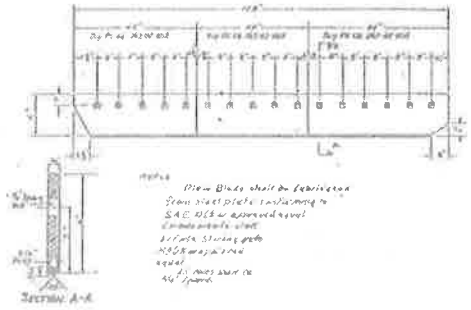

\TWY-PARTS-NO\11-EQUIPMENT MAINTENANCE\

NEW YORK STATE THRUWAY AUTHORITY
DEPARTMENT OF ENGINEERING SERVICES

DRAWING TITLE

DRAWN BY: DD	DATE: DATE	DRAWING NUMBER:
CHECKED BY: DD	SCALE: N.T.S.	1-1-241AT

\TWY-PARTS-NO\11-EQUIPMENT MAINTENANCE\11-2-066AD

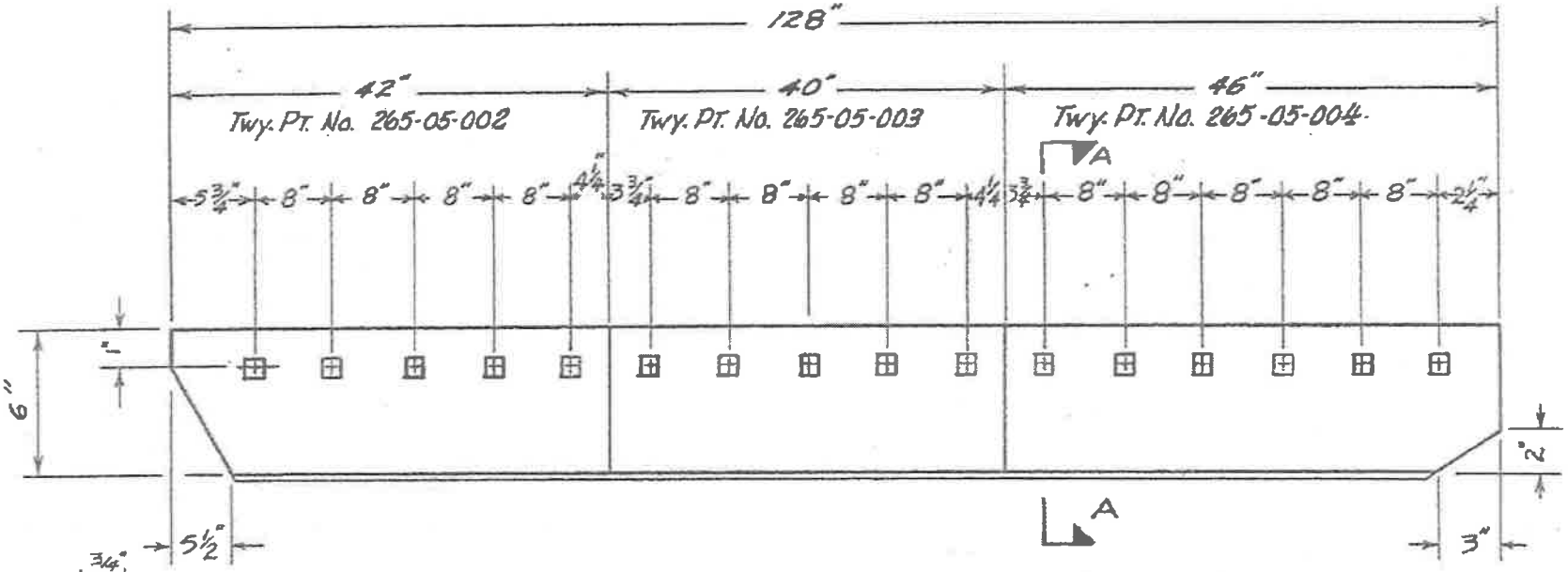

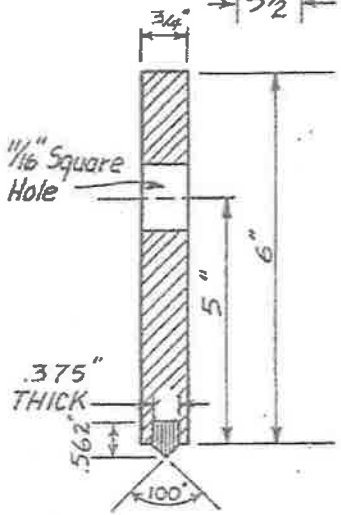

SECTION: A-A

Notes:

Plow Blade shall be fabricated from steel plate conforming to SAE 1020 or approved equal. Carbide inserts shall be Firth Sterling grade MPD11 or approved equal. All holes shall be 11/16" Square.

NEW YORK STATE THRUWAY AUTHORITY
DEPARTMENT OF ENGINEERING SERVICES

12'-0" CARBIDE TIPPED SECTION WING BLADE

DRAWN BY: LS	DATE: 5/14/73	DRAWING NUMBER:
CHECKED BY: LC	SCALE: N.T.S.	11-2-66 AO

ATTACHMENT D
88 of 102

SNOW PLOW BLADE CUTTING EDGES
OTHER BLADE SYSTEMS NOT INCLUDED IN THE ATTACHED SPECIFICATIONS

BIDDERS MAY OFFER FOR CONSIDERATION, OTHER PLOW BLADES AND BLADE SYSTEMS THAT ARE NOT OTHERWISE INCLUDED IN THE ATTACHED SPECIFICATIONS.

BIDDERS MUST INCLUDE COMPLETE DETAILED SPECIFICATIONS AND DESCRIPTIONS FOR ANY BLADE OR BLADE SYSTEM OFFERED.

SNOW PLOW BLADE CUTTING EDGES
DELIVERY LOCATIONS
VERMONT

AGENCY OF TRANSPORTATION
MAINTENANCE & AVIATION DIVISION
DISTRICT & CENTRAL GARAGE
ADDRESSES

DISTRICT 1: 359 BOWEN RD.
BENNINGTON, VT 05201

DISTRICT 2: 870 US RTE. 5
N. BRATTLEBORO, VT 05304

DISTRICT 3: 122 STATE PLACE
RUTLAND, VERMONT
05701

DISTRICT 4: 221 BESWICK DR.
WHITE RIVER JCT., VT 05001

DISTRICT 5: 5 BARNES RD.
COLCHESTER, VT 05452

DISTRICT 6: 186 INDUSTRIAL LANE RD.-
BERLIN BARRE, VT 05641

DISTRICT 7: 1068 US RTE. 5, SUITE 2
ST. JOHNSBURY, VT 05819

DISTRICT 8: 680 LOWER NEWTON RD.
ST. ALBANS, VT 05478

DISTRICT 9: 4611 US RTE. 5
NEWPORT, VT 05855

TRAFFIC SHOP/CENTRAL GARAGE: BARRE-MONTPELIER RD.
BARRE, VT
05641

SNOW PLOW BLADE CUTTING EDGES
DELIVERY LOCATIONS
IDAHO

District 1 Yard
600 West Prairie
Coeur d'Alene, ID 83814

District 2 Yard
2600 Frontage Road
Lewiston, ID 83501-0837

District 3 Yard
8150 Chinden Boulevard
Boise, ID 83714

District 4 Yard
216 Date Street
Shoshone, ID 83352

District 5 Yard
5151 South 5th

Pocatello, Idaho 83204

District 6 Yard
206 N. Yellowstone

Rigby, Idaho 83442

SNOW PLOW BLADE CUTTING EDGES
DELIVERY LOCATIONS
MASSACHUSSETTS

MassDOT Central Warehouse
668 South Ave
Weston, MA 02493

SNOW PLOW BLADE CUTTING EDGES
DELIVERY LOCATIONS
ALASKA

FOB Points for Alaska:

1. *Fairbanks: 2301 Peger Road, Fairbanks AK 99709*
2. *Seattle: Dockside Seattle*
3. *Anchorage: 5300 Tudor Rd., Anchorage, AK 99507*
4. *Anchorage Int'l Airport: Field Maint. 5740 DeHavilland Dr, Anchorage, AK 99502*
5. *Palmer: 289 Inner Springs Loop, Palmer, AK 99645*

Seattle would be the out-of-state CDPP with the following language:

CONTRACT DESIGNATED PRICING POINTS:

1) The contract(s) resulting from this solicitation will provide pricing for items delivered to in-state Alaska (three destinations; Anchorage, Palmer and Fairbanks, Alaska) and Dockside Seattle, Washington. These two areas are known as the Contract Designated Pricing Points (CDPP). CDPP's are further defined as:

   a) the CDPP of Anchorage, Alaska is defined as prepared for further shipment and delivered at the DOT/PF facility, or the receiving yard of the state's specified carrier (water, surface or air carrier) in Anchorage, Alaska;

   b) *the CDPP of Fairbanks, Alaska is defined as prepared for further shipment and delivered at the Department of Transportation & Public Facilities Maintenance Station Yard at 2301 Peger Road, Fairbanks, Alaska, or the receiving yard of the state's specified carrier (water, surface or air carrier) in Fairbanks, Alaska;*

   c) the CDPP of Palmer, Alaska is defined as prepared for further shipment and delivered at the Department of Transportation & Public Facilities Maintenance Station Yard at 289 Inner Springs Loop, Palmer, AK 99645, or the receiving yard of the state's specified carrier (surface or air carrier) in Palmer, Alaska

   d) the CDPP of Dockside, Seattle, Washington is defined as prepared for further shipment and delivered at the receiving yard of the state's specified water carrier in Seattle, Washington.

2) Some orders will require additional shipping by the Contractor from the CDPP's to other locations within the State of Alaska. In such cases, the Contractor must ship to the final destination and prepay any additional shipping from the designated CDPP. **The Contractor shall invoice the additional shipping costs as a separate item and provide actual cost receipts with the invoice.** In all instances where additional

shipping occurs, the State reserves the right to determine the method of shipment based on need. Following are examples of shipping and delivery to the final destination other than the CDPP's:

a) An order with a final destination of Wasilla, Alaska will be ordered from the Contractor awarded the contract for that Lot and priced for the CDPP of Palmer, Alaska. The Contractor will ship and deliver the items to the Wasilla DOT/PF facility noted on the order. The State will be invoiced the price of the items listed for the CDPP of Palmer, Alaska, plus the additional shipping from Anchorage to the Palmer DOT/PF facility as a separate item. **The Contractor must provide with their invoice, actual cost receipts for any additional shipping charges beyond the CDPP.**

b) An order with a final destination of Tok, Alaska, will be ordered from the Contractor awarded the contract for that Lot and priced for the CDPP of Fairbanks, Alaska. The Contractor will ship and deliver the items to the Tok DOT/PF facility noted on the order. The State will be invoiced the price of the items listed for the CDPP of Fairbanks, Alaska, plus the shipping from Fairbanks to the Tok DOT/PF facility as a separate item. **The Contractor must provide with their invoice, actual cost receipts for any additional shipping charges beyond the CDPP.**

c) An order with a final destination of Nome, Alaska will be ordered from the Contractor awarded the contract for that Lot and priced for the CDPP of Dockside Seattle Washington. The Contractor will ship and deliver the items to the Nome DOT/PF facility noted on the order. The State will be invoiced for the price of the items listed for the CDPP of Dockside Seattle, Washington, plus the shipping from Dockside Seattle to the Nome DOT/PF facility as a separate item. **The Contractor must provide with their invoice, actual cost receipts for any additional shipping charges beyond the CDPP.**

d) An order with a final destination of Kodiak, Alaska shall be ordered from the Contractor awarded the contract for that Lot and at the State's discretion, priced for the CDPP of Anchorage, Alaska OR from the CDPP Dockside Seattle, Washington. The Contractor will deliver the items to the final destination (Kodiak DOT/PF facility) noted on the order and invoice for the price of the items listed for the CDPP location selected by the State. **The additional shipping costs from the designated CDPP to the final destination shall be invoiced as a separate item. The Contractor must provide with their invoice, actual cost receipts for any additional shipping charges beyond the CDPP.**

F.O.B. POINT: The F.O.B. point for all items purchased under this contract is the final destination anywhere within the State of Alaska. Ownership of and title to the ordered items remains with the contractor until the items have been delivered to their final destination and are accepted by the State.

The State reserves the right to select the Contract Destination Pricing Points (CDPP) when placing the order. The cost of shipping and delivery to the CDPP is to be included in the bid price. The cost of shipping and delivery for orders beyond a CDPP will be handled as follows:

The contractor will prepay the shipping and delivery charges to any destination named by the State in its order. The contractor will charge-back those actual shipping and delivery charges to the State as a separate item on the State's invoice. In all instances where additional shipping occurs, the State reserves the right to determine the method of shipment based on cost or need.

SNOW PLOW BLADE CUTTING EDGES
DELIVERY LOCATIONS
UTAH

TBD

SNOW PLOW BLADE CUTTING EDGES
DELIVERY LOCATIONS
NEW HAMPSHIRE

Highway Maintenance Districts

DISTRICT	DELIVERY LOCATION / CONTACT PERSON	TELEPHONE
District 1	Brian Schutt, District One Engineer **Attn: John Ross Jr.** NHDOT Patrol Shed 107 W - Whitefield **24 Foster Drive** Whitefield, NH 03598	603-788-4641 603-631-9151 (Cell)
District 2	Alan G. Hanscom, District Two Engineer **c/o Dennis Ford, Maintenance Supervisor** Exit 16, I-89, 8 Eastman Hill Road Enfield, NH 03748	603-448-2654
District 3	Mark Morrill, District Three Engineer **c/o Andrew Dame, Warehouse Supervisor** District Three Patrol Shed Warehouse 310 710 Whittier Highway (Route 25) Moultonborough NH 03254	603-524-6667 603-419-0810
District 4	John Kallfelz, District Four Engineer **c/o Robert Hebert, Warehouse Supervisor** 19 Base Hill Road Swanzey, NH 03446-3401	603-352-6614 603)419-0406 (Cell)
District 5	Rich Radwanski, District Five Engineer **c/o Amy Mansfield, Warehouse Supervisor** District Five Patrol Shed 505 670 Route 3A Bow, NH 03304	603-666-3336
District 6	Douglas DePorter, District Six Engineer **c/o Michael Lavoie or Ken Mailhot, Maintenance Supervisors** District Six Patrol Shed 608 Route 125 Epping (adjacent to Motor Vehicle/State Police) Durham, NH 03824	603-868-1133
Bureau of Turnpikes	Dix Bailey, Maintenance Supervisor NHDOT Bureau of Turnpikes 36 Hackett Hill Road Hooksett NH 03106 Exit 11, off I-93	603-485-3806

SNOW PLOW BLADE CUTTING EDGES
DELIVERY LOCATIONS
MAINE

Region 1 Scarborough Fleet Service, 61 Pleasant Hill Road, Scarborough, Maine 04070

Region 2 Augusta Fleet Service, Wade Street Entrance, Augusta, Maine 04333

Region 3 Dixfield Fleet Service, 547 Main St., Dixfield Maine 04224

Region 4 Hancock Bridge Lot, 327 Thorsen Road, Hancock Maine 04640

Region 5 Caribou Fleet Service, 145 Bennett Dr., Caribou Maine 04736

Region 5 Houlton Fleet Service, 159 Bangor Street, Houlton, Maine 04730

SNOW PLOW BLADE CUTTING EDGES
DELIVERY LOCATIONS
CONNECTICUT

DOT Warehouse – 660 Brook Street Rocky Hill, Connecticut 06067

SNOW PLOW BLADE CUTTING EDGES
DELIVERY LOCATIONS
COLORADO

1001 – Aurora -- 18500 E. Colfax, Aurora, CO 80011

Thad Fraedrich	(303) 365-7122 (1-7122)
Aurora Fax:	(303) 340-3710 (1-3710)

1002 – CDOT Eisenhower Tunnel –
Ship to: Whse 13, East Portal, 8mile east on I-70, Silverthorne CO 80498
Invoice to: PO Box 397, Idaho Springs, CO 80452-0397

Vacant	(303) 512-5745 (1-5745)
Brook Howard	(303) 512-5732 (1-5732)
Richard Rangel	(303) 512-5746 (1-5746)
Tunnel Fax	(303) 512-5797 (1-5797)

2001 – Pueblo -- 905 Erie Ave, Pueblo, CO 81001

Kyle Carver	(719) 546-5423 (2-5423)
Pueblo Fax	(719) 546-5484 (2-5484)

3001 – Grand Junction – 606 9th St., Grand Junction, CO 81501

Mario Ramos	(970) 683-6322 (3-6322)
Grand Junction Fax	(970) 683-6342 (3-6342)

3002 – Craig – 260 Ranney St, Craig, CO 81625

Dennis Sanchez	(970) 826-5163 (3-5163)
Sandy Shultz	(970) 826-5172 (3-5172)
Craig Fax	(970) 826-5182 (3-5182)

4001 - Greeley -- 1420 2nd St., Greeley, CO 80631

Kim Cornwell	(970) 350-2125 (4-2125)
Greeley Fax	(970) 350-2199 (4-2199)

5001 – Alamosa – 1205 West Avenue, Alamosa, CO 81101

Gary Hagaman	(719) 587-6420 (5-6420)
Alamosa Fax	(719) 587 6424 (5-6424)

5002 – Durango -- 20581 Hwy 160 West, Durango, CO 81301

Dean Stanton	(970) 385-1657 (5-1657)
Durango Fax	(970) 385-1669 (5-1669)

SNOW PLOW BLADE CUTTING EDGES
DELIVERY LOCATIONS
NEW YORK

21 Ninth St,
Waterford, NY 12188

10 Harbor Lock Road West Utica, NY 13502

5450 South Bay Rd
No. Syracuse, NY 13212

2797 Clover St.
Pittsford, NY 14534

4717 Southwestern Blvd. Hamburg, NY 14075

7000 County Route 70A Hornell, NY 14843

Box 22422, Route 342 Watertown, NY 13601

272-278 Violet Avenue Poughkeepsie, NY 12601

241 Colesville Road Binghamton, NY 13904

375 North Carleton Ave, Central Islip, NY 11722

New York Division

Interchange 12

201 North Route 303

West Nyack, NY 10994

Albany Division

Interchange 23

Route 9W

Albany, NY 12209

Syracuse Division

Interchange 35

6517 Old Thompson Road

East Syracuse, NY 13057

Buffalo Division

Interchange 52

1870 Walden Avenue

Cheektowaga, NY 14225